Foundations.

A short Text-book on Ordinary Foundations, including a brief Description of the Methods Used for Difficult Foundations. 8vo, vii+110 pages. 56 figures. Cloth, $1.25 net.

Influence Diagrams for the Determination of Maximum Moments in Trusses and Beams

8vo, vii+65 pages, 42 figures. Cloth, $1.25 net.

The Design of Simple Roof-trusses in Wood and Steel.

With an Introduction to the Elements of Graphic Statics. Third edition, revised and enlarged. 8vo, vi+173 pages, 124 figures and 3 folding plates. Cloth, $1.80 net.

Retaining-walls for Earth.

Including the theory of Earth-pressure as Developed from the Ellipse of Stress. With a Short Treatise on Foundations. Illustrated with Examples from Practice. Sixth edition, revised and enlarged. 12mo, xv+194 pages, 110 figures. Cloth, $1.25 net.

A Treatise on Arches.

Designed for the use of Engineers and Students in Technical Schools. Second edition, revised and enlarged. 8vo, xxv+369 pages, 74 figures. Cloth, $4.00 net.

Symmetrical Masonry Arches.

Including Natural Stone, Plain concrete and Reinforced concrete arches, for the use of Technical Schools, Engineers and Computers in Designing Arches according to the Elastic Theory. Second edition, revised and enlarged. 8vo, xxiv+245 pages. Profusely illustrated with figures in the text and folding plates. Cloth, $2.50 net.

THE DESIGN OF
SIMPLE ROOF-TRUSSES
IN WOOD AND STEEL.

WITH AN INTRODUCTION TO THE ELEMENTS OF GRAPHIC STATICS.

BY
MALVERD A. HOWE, C.E.,
Professor of Civil Engineering, Rose Polytechnic Institute;
Member of American Society of Civil Engineers.

THIRD EDITION, REVISED AND ENLARGED.
FIRST THOUSAND.

NEW YORK
JOHN WILEY & SONS, INC.
LONDON: CHAPMAN & HALL, LIMITED
1915

624.2

Copyright: 1902, 1912,
BY
MALVERD A. HOWE.

THE SCIENTIFIC PRESS
ROBERT DRUMMOND AND COMPANY
BROOKLYN, N. Y.

PREFACE TO FIRST EDITION.

VERY little, if anything, new will be found in the following pages. The object in writing them has been to bring together in a small compass all the essentials required in properly designing ordinary roof-trusses in wood and steel.

At present this matter is widely scattered in the various comprehensive treatises on designing and in manufacturers' pocket-books. The student who desires to master the elements of designing simple structures is thus compelled to procure and refer to several more or less expensive books.

Students in mechanical and electrical engineering, as a rule, learn but little of the methods of designing employed by students in civil engineering. For this reason the writer has been called upon for several years to give a short course in roof-truss design to all students in the Junior class of the Rose Polytechnic Institute, and in order to do so he has been compelled to collect the data he has given in this book.

The tables giving the properties of standard shapes are based upon sections rolled by the Cambria Steel Company. Standard sections rolled by other manufacturers have practically the same dimensions.

MALVERD A. HOWE.

TERRE HAUTE, IND., September, 1902.

SEP 1 - '65

THE HUNT LIBRARY
CARNEGIE INSTITUTE OF TECHNOLOGY

PREFACE TO THE THIRD EDITION.

THE design of details in wood has been revised, using the standard or actual sizes of lumber instead of the nominal sizes. The unit stresses for wood as given in Table XVI have been used without increasing them, although some designers use from thirty to fifty per cent larger values. If selected lumber were always obtainable, the larger values could be safely employed. Considerable new matter will be found in the body of the text and in the Appendix.

The author is indebted to Prof. H. A. Thomas for a careful reading of the text.

M. A. H.

TERRE HAUTE, IND.,
August, 1912.

ART. PAGE
82. Design of Joint L_0 100
83. " " " U_1 101
84. " " " L_2 101
85. " " " U_3 102
86. Splices 102
87. End Supports 102
88. Expansion 103
89. Frame Lines and Rivet Lines 103
90. Drawings 103
91. Connections for Angles 104
92. Purlins 104
93. End Cuts of Angles—Shape of Gusset Plates 107

TABLES.

I. Weights of Various Substances 109
II. Roof Coverings—Weights of 111
III. Rivets—Standard Spacing and Sizes 115
IV. Rivets—Areas to be Deducted for 117
V. Round-headed Rivets and Bolts—Weights 118
VI. Bolt Heads and Nuts—Weights and Dimensions 119
VII. Upset Screw Ends for Round Bars—Dimensions 120
VIII. Right and Left Nuts—Dimensions and Weights 121
IX. Properties of Standard I Beams 122
X. Properties of Standard Channels 124
XI. Properties of Standard Angles with Equal Legs 126
XII. Properties of Standard Angles with Unequal Legs 128
XIII. Least Radii of Gyration for Two Angles Back to Back 134
XIV. Properties of T Bars 135
XV. Standard Sizes of Yellow Pine Lumber and Corresponding Areas and Section Moduli 137
XVI. Average Safe Allowable Working Unit Stresses for Wood 139
XVII. Cast-iron Washers—Weights of 140
XVIII. Safe Shearing and Tensile Strength of Bolts 141

APPENDIX.

ART.
1. Length of Keys, Spacing of Notches and Spacing of Bolts 143
2. Plate Washers and Metal Hooks for Trusses of Wood 145
3. A Graphical Solution of the Knee-brace Problem 148
4. Trusses which may have Inclined Reactions 151
5. Tests of Joints in Wooden Trusses 155
6. Examples of Details Employed in Practice 155
7. Abstracts from General Specifications for Steel Roofs and Buildings .. 163

CHAPTER V

DESIGN OF A WOODEN ROOF-TRUSS.

ART.		PAGE
47.	Data	51
48.	Allowable Unit Stresses	52
49.	Rafters	52
50.	Purlins	53
51.	Loads at Truss Apexes	54
52.	Stresses in Truss Members	55
53.	Sizes of Compression Members of Wood	57
54.	Sizes of Tension Members of Wood	59
55.	Sizes of Steel Tension Members	60
56.	Design of Joint L_0 with $1\frac{1}{8}''$ Bolts	61
56a.	" " " " Bolts and Metal Plates	66
57.	" " " " Nearly all Wood	68
58.	" " " " Steel Stirrup	68
59.	" " " " " " and Pin	70
60.	" " " " Plate Stirrup and Pin	72
61.	" " " " Steel Angle Block	73
62.	" " " " Cast-iron Angle Block	73
63.	" " " " Special	74
64.	" " " " Plank Members	76
65.	" " " " Soft Steel Plates and Bolts	76
66.	Design of Wall Bearing	77
67.	Design of Joint U_2	78
68.	" " " U_1	81
69.	" " " L_2	82
70.	" " " L_3 and Hook Splice	85
71.	" " " L_3, Fish-plate Splice of Wood	86
72.	" " " L_3, Fish-plate of Metal	88
73.	Metal Splices for Tension Members of Wood	90
74.	General Remarks Concerning Splice	90
75.	Design of Joint U_3	91
76.	The Attachment of Purlins	91
77.	The Complete Design	92

CHAPTER IV.

DESIGN OF A STEEL ROOF-TRUSS.

78.	Data	96
79.	Allowable Stresses per Square Inch	96
80.	Sizes of Compression Members	96
81.	" " Tension Members	99

GRAPHICS.

CHAPTER I.

GENERAL PRINCIPLES AND METHODS.

1. **Equilibrium.**—Forces acting upon a rigid body are in equilibrium when the body has neither motion of translation nor rotation.

For forces which lie in the same plane the above conditions may be stated as follows:

(*a*) There will be no motion of translation when the algebraic sums of the components of the forces resolved parallel to any two coordinate axes are zero. For convenience the axes are usually taken vertical and horizontal, then the vertical components equal zero and the horizontal components equal zero.

(*b*) There will be no motion of rotation when the algebraic sum of the moments of the forces about any center of moments is zero.

2. **The Force Polygon.**—Let *AB*, *BC*, *CD*, and *DA*, Fig. 1, be any number of forces in equilibrium. If these forces are laid off to a common scale in succession, parallel to the directions in Fig. 1, a closed figure will be formed as shown in Fig. 1*a*. This must be true if the algebraic sums of the vertical and horizontal components respectively equal zero and there is no motion of translation. Such a figure is called a force polygon.

Conversely, if any number of forces are laid off as explained above and a closed figure is formed, the forces are

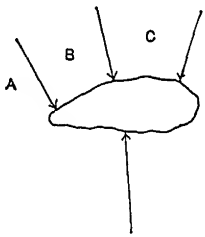

FIG. 1.

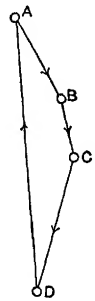

FIG. 1*a*.

in equilibrium as far as motion of translation is concerned. Motion of rotation may exist, however, when the above condition obtains.

3. **Forces Not in Equilibrium.**—In case a number of forces, not in equilibrium, are known in direction and magnitude, the principle of the force polygon (Art. 2) makes it possible to at once determine the magnitude and direction of the force necessary to produce equilibrium.

FIG. 2.

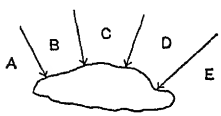

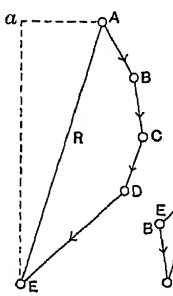

FIG. 2*a*.

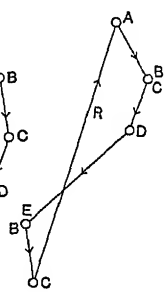

FIG. 2*b*.

Let AB, $BC, \ldots, DE$ be forces not in equilibrium, Fig. 2. According to Art. 2, lay them off on some convenient scale, as shown in Fig. 2*a*. Now in order that the sum of the vertical components shall equal zero a force must be introduced

having a vertical component equal to the vertical distance between E and A, and in order that the horizontal components may equal zero the horizontal component of this force must equal the horizontal distance between E and A. These conditions are satisfied by the force EA. If this force acts in the direction shown by the arrow-head in Fig. 2*a*, it will keep the given forces in equilibrium (Art. 2). If it acts in the opposite direction, its effect will be the same as the given forces, and hence when so acting it is called the *resultant*.

Fig. 2*b* shows the force polygon for the above forces drawn in a different order. The magnitude and direction of R is the same as found in Fig. 2*a*.

4. Perfect Equilibrium.—Let the forces AB, BC, . . . , DE, Fig. 2, act upon a rigid body. Evidently the force R, found above (Art. 3), will prevent motion, either vertically or horizontally, wherever it may be applied to the body. This fulfills condition (*a*) (Art. 1). For perfect equilibrium condition (*b*) (Art. 1) must also be satisfied. Hence there must be found a point through which R may act so that the algebraic sum of the moments of the forces given and R, may be zero. This point is found by means of the equilibrium polygon.

5. The Equilibrium Polygon.—Draw the force polygon (Art. 2) $ABCDE$, Fig. 3*a*, and from any convenient point P draw the lines S_1, S_2, . . . , S_5. If S_1 and S_2 be measured with the scale of the force polygon, they represent the magnitudes and directions of two forces which would keep AB in equilibrium as far as translation is concerned, for they form a closed figure with AB (Art. 2). Likewise S_2 and S_3 would keep BC in equilibrium, etc. Now in Fig. 3 draw

points 1, 2, 3, and 4 will be *without motion*, since the forces

FIG. 3.

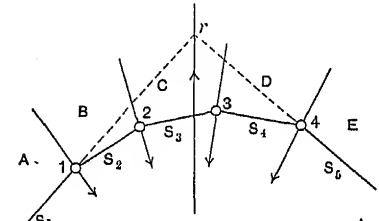

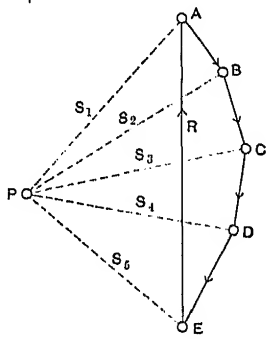

FIG. 3*a*.

meeting at each point are in equilibrium against translation by construction, and, since they meet in a point, there can be no rotation.

In Fig. 3*a*, S_1 and S_5 form a closed figure with R; therefore if, in Fig. 3, S_1 and S_5 be prolonged until they intersect in the point r, this point will be free of all motion under the action of the forces S_1, S_5, and R.

Since the points 1, 2, 3, 4, and r in Fig. 3 have neither motion of translation nor rotation, if the forces AB, BC, CD, and DE and the force R be applied to a rigid body in the relative positions shown in Fig. 3, this body will have no

motion under their action. The forces S_1 and S_5 keep the system $ABCD$ in equilibrium and can be replaced by R.

The lines S_1, S_2, etc., in Fig. 3*a* are for convenience called *strings*, and the polygon S_1, S_2, S_3, etc., in Fig. 3 is called the *equilibrium polygon*.

The point P in Fig. 3*a* is called the *pole*.

6. Application of the Equilibrium Polygon in Finding Reactions.—Let a rigid body be supported at K and K', Fig. 4, and acted upon by the forces AB, BC, CD, and

FIG. 4.

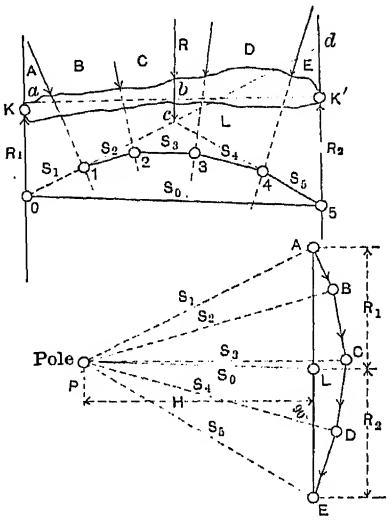

FIG. 4*a*.

DE. Then, if equilibrium exists, it is clear that two forces, one at each support, must keep the forces AB, BC, etc., in equilibrium. These two forces are called *reactions*. For convenience designate the one upon the left as R_1, and the one upon the right as R_2. The magnitudes of R_1 and R_2 can be found in the following manner: Construct the force

polygon and draw the strings S_1, S_2, etc., as shown in Fig. 4*a*, and then construct the equilibrium polygon (Art. 5) as shown in Fig. 4. Unless some special condition is introduced the reactions R_1 and R_2 will be parallel to EA, Fig. 4*a*, and their sum equal the magnitude of EA, or the resultant of the forces AB, BC, CD, DE. Draw through K and K' lines parallel to R, and, if necessary, prolong the line S_1 until it cuts oK, Fig. 4, and S_5 until it cuts $5K'$. Connect o and 5, and in Fig. 4*a*, draw the string S_0 parallel to o5, Fig. 4, until it cuts EA in L. Now, since S_1, S_0, and AL form a closed figure in Fig. 4*a*, the point o in Fig. 4 will be in equilibrium under the action of these three forces. For a like reason the point 5 will be in equilibrium under the action of the three forces S_0, S_5, and EL. Therefore the reaction $R_1 = AL$ and $R_2 = LE$, and the body M will be in equilibrium under the action of the forces AB, BC, CD, DE, R_1 and R_2.

It may not be perfectly clear that no rotation can take place from the above demonstration, though there can be no translation since $R_1 + R_2 = EA$, the force necessary to prevent translation under the action of the forces AB, BC, CD, and DE.

To prove that rotation cannot take place let the forces AB, BC, etc., be replaced by their *resultant* R, acting downward, as shown in Fig. 4.

If no rotation takes place (Art. 1),

$$R(bK') = R_1(aK') \quad \text{or} \quad R_1 = \frac{bK'}{aK'}R.$$

From the similar triangles $od5$, Fig. 4, and PAL, Fig. 4*a*,

$$d5 : aK' :: R_1 : H \quad \text{or} \quad R_1 aK' = H(d5).$$

From the similar triangles cd_5, Fig. 4, and PAE, Fig. 4a,

$$d_5 : bK' :: R : H \quad \text{or} \quad R(bK') = H(d_5).$$

$$\therefore \quad R_1(aK') = RbK' \quad \text{or} \quad R_1 = \frac{bK'}{aK'} R,$$

or the value of R_1 by the above construction fulfills the condition that no rotation takes place.

7. Parallel Forces.—In case the forces AB, BC, etc., had been parallel the force polygon would become a straight line and the line $ABCD \ldots E$ would coincide with EA. All of the constructions and conclusions given above apply to such an arrangement of forces. See Figs. 9 and 9a.

8. The Direction of One Reaction Given, to Find the Magnitude and Direction of the Other.—Let the direction of R_2 be assumed as vertical, then the horizontal compo-

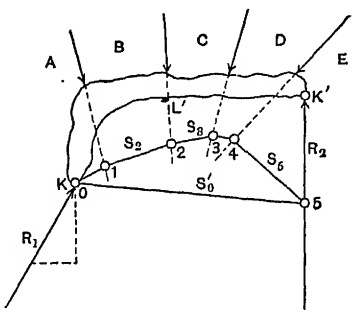

FIG 5.

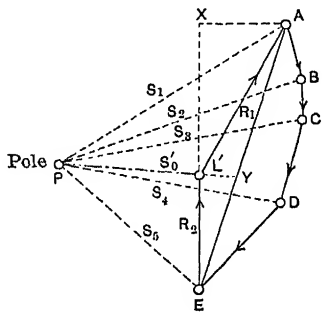

FIG. 5a.

nent, if any, of all the forces acting must be applied at K. The force polygon (Art. 2) becomes $ABCDEX$, as shown in Fig. 5a. Assume any pole P, and draw the strings S_1, S_2, etc. In Fig. 5, construct the equilibrium polygon (Art. 5) as shown, *starting with* S_1, *passing through* K, *the only point on* R_1 *which is known.* Draw the closing line S_0', and in

Fig, 5*a* the string PL' parallel to S_0' of Fig. 5. Then EL' is the magnitude of the vertical reaction R_2, and $L'A$ the magnitude and direction of the reaction R_1.

To show that there will be no rotation under the action of the above forces, draw AE, EC, AC, and DE in Fig. 6, parallel to S_1, S_5, PY, and AE respectively in Fig. 5*a*. Then the point E is in equilibrium under the action of S_1, S_5, and R, since these forces form a closed figure in Fig. 5*a*. In Fig. 6, draw AB, CB, and BE parallel to R_1, R_2, and AE of Fig. 5*a*. Then point B is in equilibrium under the action of R_1, R_2, and R, and BE is parallel to ED. But R_1, S_1, and R, and R_2, S_5, and R must form closed figures in Fig. 6, as they meet in a point in Fig. 5*a* respectively. Therefore BE prolonged coincides with DE, and there can be no rotation, since R_1, R_2, and R meet in a point.

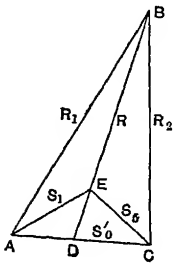

FIG. 6.

9. Application of the Equilibrium Polygon in Finding Centers of Gravity.—Let *abc . . . k* be an unsymmetrical body having the dimension normal to the paper equal unity. Divide the area into rectangles or triangles whose centers of gravity are readily determined. Compute the area of each small figure, and assume that this area multiplied by the weight of a unit mass is concentrated at the center of gravity of its respective area. These weights may now be considered as parallel forces P_1, P_2 and P_3, acting as shown in Fig. 7. The resultant of these forces must pass through the center of gravity of the entire mass, and hence lies in the lines R and R' formed by constructing two equilibrium

polygons for the forces P_1, P_2, and P_3, first acting vertically and then horizontally. The intersection of the lines R and R' is the center of gravity of the mass.

The load lines in Fig. 8 and Fig. 8a are not necessarily at right angles, but such an arrangement determines the point of intersection of R and R' with a maximum degree of accuracy, since they intersect at right angles.

FIG. 7.

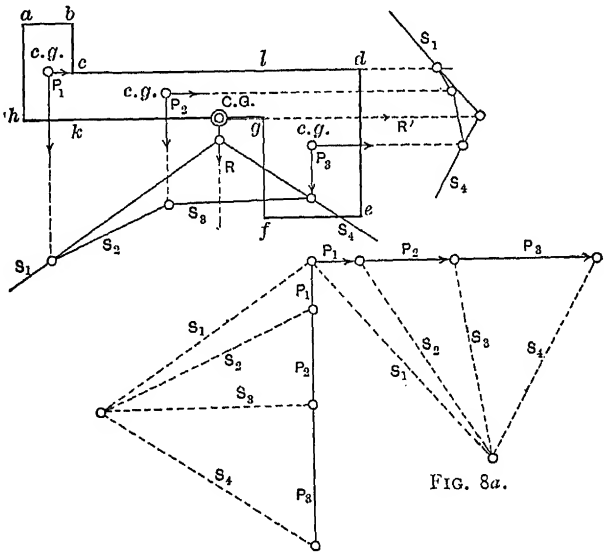

FIG. 8a.

FIG. 8.

In the above constructions the weight of a unit mass is a common factor, and hence may be omitted and the areas alone of the small figures be used as the values of P_1, P_2, and P_3.

10. Application of the Equilibrium Polygon in Finding Moments of Parallel Forces.—Let AB, BC, . . . , EF be any number of parallel forces, and M' and N' two points through which R_1 and R_2 pass (Fig. 9). Construct the force

polygon Fig. 9*a*, and select some point P as a pole, so that the perpendicular distance H from the load line is 1000, 10000, or some similar quantity. Construct the equilibrium polygon Fig. 9 as explained in previous articles.

Suppose the moment of AB, BC, and CD about M' as a center of moments is desired. The moment equals $AB(a_1) + BC(a_2) + CD(a_3) = M_m$. Prolong the lines S_2,

FIG. 9.

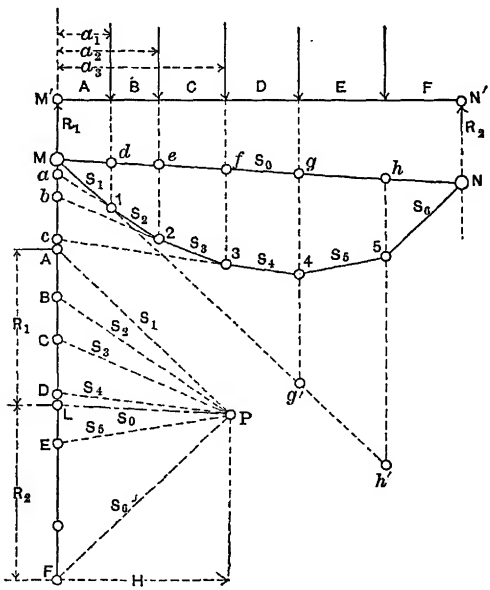

FIG. 9*a*.

S_3, and S_4 until they cut a line through M' parallel to AB, BC, etc.

From the triangles $Ma1$, Fig. 9, and ABP, Fig. 9*a*,

$$aM : a_1 :: AB : H \quad \text{or} \quad AB(a_1) = H(aM).$$

From the triangles $ab2$, Fig. 9, and BCP, Fig. 9*a*,

$$ab : a_2 :: BC : H \quad \text{or} \quad BC(a_2) = H(ab).$$

From the triangles $bc3$, Fig. 9, and CDP, Fig. 9a,

$$bc : a_3 :: CD : H \quad \text{or} \quad CD(a_3) = H(bc).$$

Or

$$AB(a_1) + BC(a_2) + CD(a_3) = M_m = H(aM + ab + bc) = H(Mc).$$

From this it is seen that the moment of any force equals the ordinate measured on a line passing through the center of moments, and parallel to the given force, which is cut off between the two sides of the equilibrium polygon which are parallel to the two strings drawn from the pole P (prolonged if necessary until they cut this line) to the extremities of the load in Fig. 9a; multiplied by the *pole distance* H. For a combination of loads the ordinate to be multiplied by H is the *algebraic* sum of the ordinates for each load; the loads acting downward having ordinates of one kind, and those acting upward of the opposite kind.

To illustrate, let the moment of R_1, AB, BC, and CD about g be required. In Fig. 9a the strings S_1 and S_0 are drawn from the extremities of R_1, hence in Fig. 9 the ordinate gg' multiplied by H is the moment of R about g as a center of moments.

The strings S_1 and S_4 are the extreme strings for AB, BC, CD, and hence the ordinate $g'4$ multiplied by H is the moment of these forces. Now since the reaction acts upward and the forces AB, BC, and CD act downward, the ordinate $g4$ multiplied by H is the moment of the combination.

The above property of the equilibrium polygon is very convenient in finding the moments of unequal loads spaced at unequal intervals, as is the case where a locomotive stands upon a girder bridge.

11. Graphical Multiplication.—Let the sum of the products a_1b_1, a_2b_2, etc., be required. The method of the previous article can be readily applied in the solution of this problem. Let b_1. b_2, etc., be taken as loads and a_1, a_2, etc., as the lever-arms of these loads about any convenient point as shown in Fig. 10. Then $H(ab) = a_1b_1$, $H(bc) = a_2$,

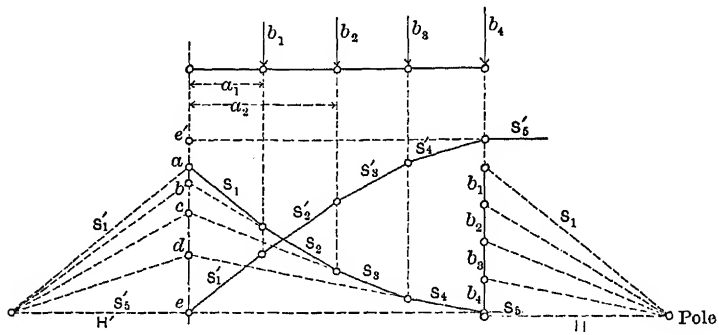

FIG. 10. FIG. 10*a*.

b_2, etc., and finally $H(ae) = \Sigma(ab)$, or the algebraic sum of the products a_1b_1, a_2b_2, etc.

In case $\Sigma(ba^2)$ is desired, the ordinates ab, bc, etc., can be taken as loads replacing b_1, b_2, etc., in Fig. 10. For convenience take a pole distance H' equal to that used before and draw the polygon S_1', S_2', etc., then $(ee')H^2 = \Sigma(ba^2)$.

12. To Draw an Equilibrium Polygon through Three Given Points.—Given the forces AB, BC, CD, and DE, it is required to pass an equilibrium polygon through the points X, Y, and Z. Construct the force polygon Fig. 11*a*, and through X and Y draw lines parallel to EA. Then, starting with S_5, passing through Y, construct the equilibrium polygon Fig. 11, drawing the closing line S_0. In Fig. 11*a* there result the two reactions R_1 and R_2 when a line is drawn through P parallel to S_0 of Fig. 11. Since the values

of R_1 and R_2 remain constant for the given loads, the pole from which the strings in Fig. 11*a* are drawn must lie upon a line drawn from L parallel to a line S_0'' connecting X and Y in Fig. 11. That is, S_0'' is the position of the closing line for all polygons passing through X and Y, and the pole can be taken anywhere upon the line $P'L$ in Fig. 11*a*. In order that the polygon may also pass through Z take the loads upon the right of Z and find their resultant EB, and through Z draw a line parallel to EB. Assume Z and Y to be two

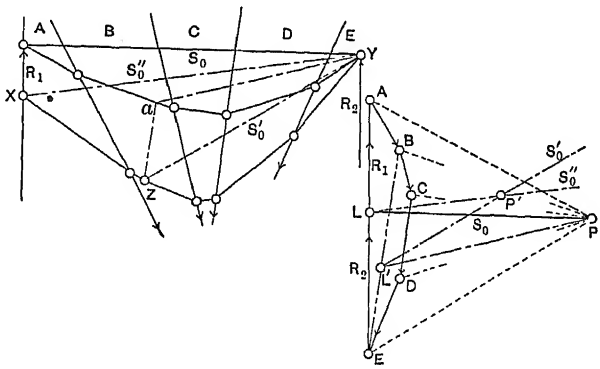

FIG. 11. FIG. 11*a*.

points through which it is desired to pass an equilibrium polygon. Proceeding as in the first case, the pole must lie somewhere upon the line $L'P'$, Fig. 11*a*, drawn parallel to aY, Fig. 11. Then if a polygon with its pole in LP' passes through X and Y, and one with its pole in $L'P'$ passes through Z, the polygon with a pole at the intersection of these lines in P' will pass through the three points X, Y, and Z.

THE HUNT LIBRARY
CARNEGIE INSTITUTE OF TECHNOLOGY

ROOF-TRUSSES.

CHAPTER II.

BEAMS AND TRUSSES.

13. Vertical Loads on a Horizontal Beam: Reactions and Moments of the Outside Forces.—Let the beam XY support the loads AB, BC, etc., Fig. 12, and let the ends of

FIG. 12.

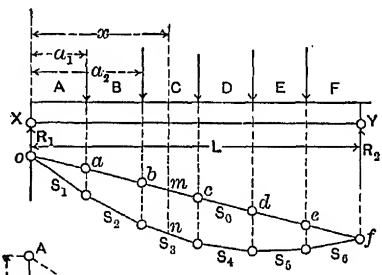

FIG. 12a.

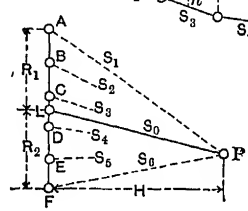

the beam rest upon supports X and Y. *Required the reactions* R_1 *and* R_2, neglecting the weight of the beam. In order that the beam remains in place free from all motion the outside forces AB, BC, etc., with R_1 and R_2 must fulfill the conditions of Art. 1. Proceeding according to Art. 6, the force polygon $ABCDEF$ is constructed, any point P taken as a pole, and the strings $S_1 \ldots . S_6$ drawn, Fig. 12*a*. Then, in Fig. 12, the equilibrium polygon is constructed,

the closing line S_0 drawn, and, parallel to this line, LP is drawn in Fig. 12*a*, cutting the line AF into two parts; LA being the value of R_1, and LF the value of R_2.

The moment about any point in the vertical passing through any point x is readily found by Art. 10:

$$M_x = R_1x - AB(x - a_1) - BC(x - a_2) = (mn)H$$
$$= \text{the moment of the } \textit{outside forces}.$$

14. Vertical Loads on a Simple Roof-truss: Structure Considered as a Whole.—In this case the method of procedure is precisely that given in Art. 10. The reactions R_1 and R_2 will of course be equal if the loads are equal and

FIG. 13.

FIG. 13*a*.

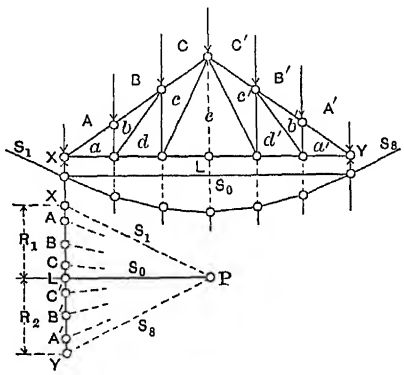

symmetrically placed about the center of the truss. This being known, the pole P may be taken on a horizontal line drawn through L, Fig. 13*a*, and then the closing line S_0 in Fig. 13 will be horizontal. The closing line may be made horizontal in any case by taking the pole P horizontally opposite L, which divides the load line into the two reactions.

It is evident from what precedes that the particular shape of the truss or its inside bracing has no influence

upon the values of R_1, R_2, and the ordinates to the equilibrium polygon. However, the internal bracing must have sufficient strength to resist the action of the outside forces and keep each point of the truss in equilibrium.

15. Inclined Loads on a Simple Roof-truss: Structure Considered as a Whole.—The case shown in Fig. 14 is that usually assumed for the action of wind upon a roof-truss,

FIG. 14.

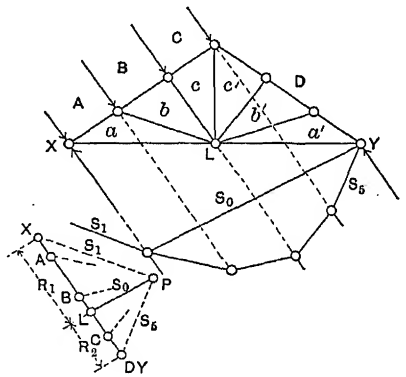

FIG. 14a.

the truss being supported at X and Y. The directions of R_1 and R_2 will be parallel to AD of Fig. 14a. The determination of the values of R_1 and R_2 is easily accomplished by Art. 10, as shown in Figs. 14 and 14a.

16. Inclined Loads on a Simple Roof-truss, One Reaction Given in Direction: Structure Considered as a Whole.—Suppose the roof-truss to be supported upon rollers at Y. Then the reaction R_2 is vertical if the rollers are on a horizontal plane. The only point in R_1 which is known is the point of support X through which it must pass. Drawing the equilibrium polygon through this point, S_5 cuts the direction of R_2 in Y', and XY' is the closing line, Fig. 15. At Y', which is by construction in equilibrium,

there are three forces acting having the directions S_0, S_5, and R_2, and these forces must make a closed figure; hence, in Fig. 15*a*, DL is the magnitude of R_2. Since R_1 must close the force polygon, LX is the magnitude and direction of R_1.

FIG. 15.

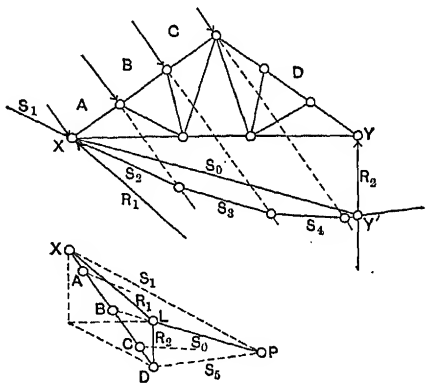

FIG. 15*a*.

If the rollers had been at X instead of Y, the method of procedure would have been quite similar. The equilibrium polygon would have passed through Y and ended upon a vertical through X, and the string S_0 would have cut off the value of R_1 on a vertical drawn through X, Fig. 15*a*.

17. Relation between the Values of R_2 in Articles 15 and 16.—In Article 15, R_2 can be replaced by its vertical and horizontal components without altering the existing equilibrium. If the supports are in a horizontal plane, the horizontal component can be applied at X instead of Y without in any way changing the equilibrium of the structure as a whole. Therefore the vertical component of R_2, as found in Art. 15, is the same in value as the R_2 found in

Art. 16. This fact makes it unnecessary to go through the constructions of Art. 16 when those of Art. 15 are at hand. The constructions necessary to determine R_1 and R_2 of Art. 16 are shown by the dotted lines in Fig. 15*a*.

18. Internal Equilibrium and Stresses.—As previously stated (Art. 14), although the structure as a whole may be in equilibrium, it is necessary that the internal framework shall have sufficient strength to resist the stresses caused

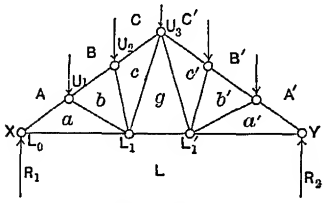

FIG. 16.

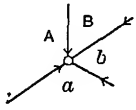

FIG 16*c*.

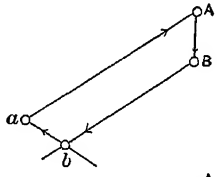

FIG. 16*a*.

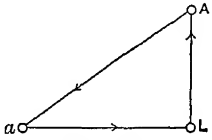

FIG. 16*b*.

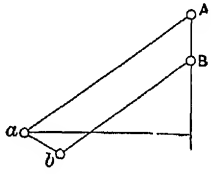

FIG. 16*d*.

by the outside forces. For example, in Fig. 16, at the point X, R_1 acts upward and the point is kept in equilibrium by the forces transmitted by the pieces Aa and La, parts of the frame. Suppose for the moment that these pieces be replaced by the stresses they transmit, as in Fig. 16*a*. The angular directions of these forces are known, but their magnitudes and character are as yet unknown. Now, since X is in equilibrium under the action of the forces R_1, Aa, and La, these forces must form a closed figure (Art. 2). Lay off R_1 or LA, as shown in Fig. 16*b*, and then through A draw a line Aa parallel to Aa, Fig. 16 or 16*a*, and through

L a line parallel to La, Fig. 16 or 16b; then La and Aa are the magnitudes of the two stresses desired. Since in forming the closed figure Fig. 16b the forces are laid off in their true directions, one after the other, the directions will be as shown by the arrow-heads. If these arrow-heads be transferred to Fig. 16a, it is seen that Aa acts toward X, and consequently the piece Aa in the frame Fig. 16 is in compression, and in like manner the piece La is in tension.

Passing to point U_1, Fig. 16, and treating it in a similar manner, it appears that there are four forces acting to produce equilibrium, two of which are known, namely, the outside force AB and the inside stress in Aa.

Fig. 16c shows the closed polygon for finding the magnitudes and directions of the stresses in ab and Bb.

Since Fig. 16b contains some of the lines found in Fig. 16c, the two figures can be combined as shown in Fig. 16d.

In finding the actual directions of the stresses, the forces acting around any given point must be considered independently in their own closed polygon. Although Fig. 16d contains all the lines necessary for the determination of the stresses around X and the point U_1, yet the stress diagram for one point is independent of that for the other, for Figs. 16b and 16c can be drawn to entirely different scales if the diagrams are not combined.

The remaining points of the truss can be treated in the manner outlined above and the stress in each member found. Separate stress diagrams may be constructed for each point, or a combination diagram employed. Since, in case of the inside stresses, the forces meet in a point and there can be no revolution, there remain but two conditions of equilibrium, namely, the sum of the vertical com-

ponents of all the forces must equal zero, and the same condition for the horizontal components. This being the case, if there are *more than two unknowns* among the forces acting at any point being considered, the problem cannot be solved by the above method.

19. Inside Forces Treated as Outside Forces.—Suppose the truss shown in Fig. 17 is cut into two parts along the line *aa*, then the left portion remains in equilibrium as long as the pieces *Dd*, *dg*, and *gL* transmit to the frame the stresses

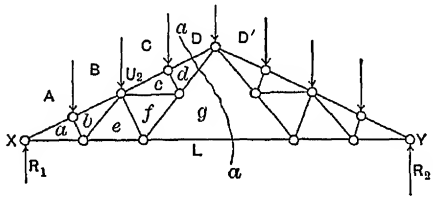

FIG. 17.

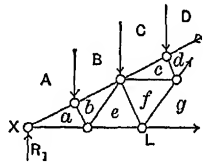

FIG. 17*a*.

which actually existed before the cut was made. This condition may be represented by Fig. 17*a*. The stresses *Dd*, *dg*, and *gL* may now be considered as outside forces, and with the other outside forces they keep the structure as a whole in equilibrium, consequently the internal arrangement of the frame will have no influence upon the magnitudes of these forces. Equilibrium would still exist if the frame were of the shape shown in Fig. 17*b* and 17*b*′.

Fig. 17*c* shows the stress diagrams for the two cases shown, and also for the original arrangement of the pieces as shown in Fig. 17.

20. More than Two Unknown Forces Meeting at a Point.—Taking each point in turn, commencing with *X*, the stress diagrams are readily formed until point U_2 of Fig. 17 is reached. Here *three* unknowns are found, and hence the

problem becomes indeterminate by the usual method. If now the method of Art. 19 is adopted, the bracing changed,

FIG. 17*b*.

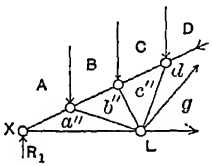

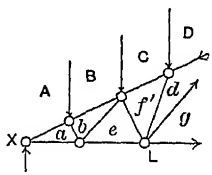

FIG. 17*b*'.

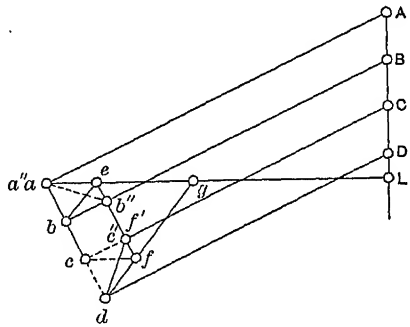

FIG. 17*c*.

and the stresses in *Dd*, *gd*, and *Lg* found, the problem can be solved by working back from these stresses to the point U_2, as shown in Fig. 17*c*.

CHAPTER III.

STRENGTH OF MATERIALS.

21. Wood in Compression: Columns or Struts.—When a piece of wood *over fifteen diameters* in length is subject to compression, the total load or stress required to produce failure depends upon the kind of wood and the ratio of the least dimension to its length. If the strut is circular in cross-section, then its least dimension is the diameter of this section; if rectangular in section, then the least dimension is the smaller side of the rectangular section. The above statements apply to the usual forms of timber which are uniform in cross-section from end to end.

A piece of oak $6'' \times 8'' \times 120''$ long requires about twice the load to produce failure that a similar piece $300''$ long requires.

A piece of oak $3'' \times 8'' \times 120''$ requires but about one third the load that a piece $6'' \times 8'' \times 120''$ requires for failure.

The actual ultimate strengths of the various woods used in structures have been determined experimentally and numerous formulas devised to represent these results. One of the later formulas, based upon the formula of A. L. Johnson, C.E., U. S. Department of Agriculture, Division of Forestry, is

$$P = F \times \frac{700 + 15c}{700 + 15c + c^2},$$

where P = the ultimate strength in pounds per square inch of the cross-section of a strut or column;

F = the ultimate strength per square inch of wood in short pieces;

$$c = \frac{l}{d} = \frac{\text{length of column in inches}}{\text{least dimension in inches}}.$$

A table of the values of P is given on page 24.

The factor of safety to be used with this table depends upon the class of structure in which the wood is employed.

The following statements are made in Bulletin No. 12, U. S. Department of Agriculture, Division of Forestry:

"Since the strength of timber varies very greatly with the moisture contents (see Bulletin 8 of the Forestry Division), the economical designing of such structures will necessitate their being separated into groups according to the maximum moisture contents in use.

MOISTURE CLASSIFICATION.

"Class A (moisture contents, 18 per cent.)—Structures freely exposed to the weather, such as railway trestles, uncovered bridges, etc.

"Class B (moisture contents, 15 per cent.)—Structures under roof but without side shelter, freely exposed to outside air, but protected from rain, such as roof-trusses of open shops and sheds, covered bridges over streams, etc.

"Class C (moisture contents, 12 per cent.)—Structures in buildings unheated, but more or less protected from outside air, such as roof-trusses or barns, enclosed shops and sheds, etc.

"Class D (moisture contents, 10 per cent.)—Structures in buildings at all times protected from the outside air,

ULTIMATE STRENGTH OF COLUMNS. VALUES OF *P*.

$\frac{l}{d}$	ULTIMATE STRENGTH IN POUNDS PER SQUARE INCH.				
		Southern, Long-leaf or Georgia Yellow Pine, Canadian (Ottawa) White Pine, Canadian (Ontario) Red Pine, White Oak.	Douglas, Oregon and Washington Yellow Fir or Pine.	Northern or Short-leaf Yel-Yellow Pine, Spruce and Eastern Fir, Hemlock, California Redwood, California Spruce, White Pine.	Red Pine, Norway Pine, Cypress, Cedar,
	F = 6000	F = 5000	F = 4500	F = 4000	F = 3750
1	5992	4993	4494	3994	3740
2	5967	4973	4475	3978	3730
3	5928	4940	4446	3952	3700
4	5876	4897	4407	3918	3680
5	5813	4844	4359	3875	3630
6	5739	4782	4304	3826	3580
7	5656	4713	4242	3770	3530
8	5566	4638	4174	3710	3480
9	5469	4558	4102	3646	3420
10	5368	4474	4026	3579	3350
11	5264	4386	3948	3509	3290
12	5156	4297	3867	3438	3220
13	5047	4206	3785	3365	3160
14	4937	4114	3703	3291	3080
15	4826	4022	3620	3217	3020
16	4716	3930	3537	3144	2950
17	4606	3838	3455	3071	2880
18	4498	3748	3373	2998	2810
19	4391	3659	3293	2927	2750
20	4286	3571	3214	2857	2680
21	4183	3486	3137	2788	2620
22	4082	3402	3061	2721	2550
23	3983	3320	2988	2656	2490
24	3888	3240	2916	2592	2430
25	3794	3162	2846	2529	2370
26	3703	3086	2777	2469	2320
27	3615	3013	2711	2410	2260
28	3529	2941	2647	2353	2210
29	3446	2872	2585	2298	2150
30	3366	2805	2524	2244	2100
32	3212	2677	2409	2142	2010
34	3068	2557	2301	2046	1920
36	2934	2445	2200	1956	1830
38	2808	2340	2106	1872	1750
40	2690	2241	2017	1793	1680
42	2579	2149	1934	1719	1610
44	2476	2063	1857	1650	1550
46	2379	1982	1784	1586	1490
48	2288	1907	1716	1525	1430
50	2203	1835	1652	1468	1380

heated in the winter, such as roof-trusses in houses, halls, churches, etc."

Based upon the above classification of structures, the following table has been computed.

SAFETY FACTORS TO BE USED WITH THE TABLE ON P. 24.

Class.	Yellow Pine	All Others
Class A	0.20	0.20
" B	0.23	0.22
" C	0.28	0.24
" D	0.31	0.25

All struts considered in this article are assumed to have square ends.

EXAMPLE.—A white-pine column in a church is 12 feet long and 12 inches square; what is the safe load per square inch? $\frac{l}{d} = \frac{12 \times 12}{12} = 12$, and from the table on page 24 $P = 3438$ pounds per square inch. Churches belong to structures in Class D, and hence the factor of safety is 0.25 and the safe load per square inch $3438 \times 0.25 = 860$ pounds. $860 \times 144 = 123800$ pounds is the total safe load for the column.

The American Railway Engineering and Maintenance of Way Association adopted the following formula in 1907. For struts over 15 diameters long:

$$S = B\left(1 - \frac{l}{60d}\right),$$

in which S = the safe strength in pounds per square inch, B = the safe end bearing stress (see Column 3, Table XVI), l = the length of the column, and d = the least side of the column. l and d are expressed in the same unit. The following table gives the values of S for four values of B.

The values of B used in the following table differ slightly from those recommended by The American Railway Engineering and Maintenance of Way Association, as they are based upon the values given in Table XVI. The unit stresses are essentially the same as given in the table on page 24, when a factor of safety of 4 is used.

SAFE STRENGTH OF COLUMNS. VALUES OF S.

$\frac{l}{d}$	SAFE STRENGTH IN POUNDS PER SQUARE INCH.			
	Red Pine, Norway Pine, Cypress.	White Pine, Short-leaf Yellow Pine, Hemlock, Cedar.	Douglas, Oregon, and Yellow Fir, Spruce, Eastern Fir.	White Oak, Southern Long-leaf Yellow Pine.
	B = 1000	B = 1100	B = 1200	B = 1400
1 to 15	1000	1100	1200	1400
16	730	810	880	1030
17	720	790	860	1000
18	700	770	840	980
19	680	750	820	960
20	670	730	800	930
21	650	720	780	910
22	630	700	760	890
23	620	680	740	860
24	600	660	720	840
25	580	640	700	820
26	570	620	680	790
27	550	600	660	770
28	530	590	640	750
29	520	570	620	720
30	500	550	600	700

In the example on page 25, for $\frac{l}{d} = 24$, the safe load per square inch is 648 pounds with a factor of safety of 4.

From the table on page 26 the corresponding value is found to be 660 pounds, the difference between the values being but 12 pounds.

22. Metal in Compression: Columns or Struts.—Steel is practically the only metal used in roof-trusses at the present time, and, unless they are very heavy, angles are employed to the exclusion of other rolled shapes. The load required to cripple a steel column depends upon several things, such as the kind of steel, the length, the value of the least radius of gyration for the shape used (this is usually designated by the letter r, and the values are given in the manufacturers' pocket-books), the manner in which the ends are held, etc.

If a column has its end sections so fixed that they remain parallel, the column is said to be *square-ended.* If both ends are held in place by pins which are parallel, the column is said to be *pin-ended.* A column may have one square end and one pin end.

The table on page 28 contains the ultimate strength per square inch of SOFT-STEEL columns or struts.

To obtain the safe unit stress for MEDIUM STEEL:

For quiescent loads, as in buildings, divide by 3.6

For moving loads, as in bridges, divide by 4.5

Safe unit stresses recommended by C. E. Fowler are tabulated on page 173.

EXAMPLE.—What load will cripple a square-ended column of soft steel made of one standard $6'' \times 6'' \times \frac{1}{2}''$ angle if the length of the strut is 10 feet?

From any of the pocket-books or the table at end of book the value of r is 1.18 inches, then $\frac{L}{r} = \frac{10}{1.18} = 8.5$,

STRENGTH OF STEEL COLUMNS OR STRUTS

FOR VARIOUS VALUES OF $\frac{L}{r}$ IN WHICH L = LENGTH IN FEET AND r = RADIUS OF GYRATION IN INCHES.

P = ultimate strength in lbs. per square inch.

FOR SOFT STEEL.

Square Bearing.

$$P = \frac{45{,}000}{1 + \frac{(12\ L)^2}{36{,}000 r^2}}.$$

Pin and Square Bearing.

$$P = \frac{45{,}000}{1 + \frac{(12\ L)^2}{24{,}000 r^2}}.$$

Pin Bearing.

$$P = \frac{45{,}000}{1 + \frac{(12\ L)^2}{18{,}000 r^2}}.$$

To obtain safe unit stress:

For quiescent loads, as in buildings, divide by 4.
For moving loads, as in bridges, divide by 5.

$\frac{L}{r}$	ULTIMATE STRENGTH IN POUNDS PER SQUARE INCH.			$\frac{L}{r}$	ULTIMATE STRENGTH IN POUNDS PER SQUARE INCH.		
	Square.	Pin and Square.	Pin.		Square.	Pin and Square.	Pin.
3.0	43437	42694	41978	12.0	28553	24142	20911
3.2	43230	42395	41593	12.2	28207	23771	20542
3.4	43011	42081	41190	12.4	27863	23406	20179
3.6	42782	41754	40773	12.6	27522	23046	19823
3.8	42543	41412	40340	12.8	27185	22693	19474
4.0	42294	41058	39893	13.0	26850	22343	19133
4.2	42035	40693	39435	13.2	26524	22005	18797
4.4	41765	40317	38966	13.4	26189	21662	18469
4.6	41488	39930	38485	13.6	25864	21329	18148
4.8	41203	39534	37998	13.8	25543	21002	17833
5.0	40910	39130	37500	14.0	25224	20680	17523
5.2	40608	38807	36997	14.2	24909	20363	17221
5.4	40299	38300	36488	14.4	24598	20052	16925
5.6	39984	37874	35975	14.6	24290	19746	16634
5.8	39663	37443	35457	14.8	23985	19445	16350
6.0	39335	37006	34938	15.0	23684	19148	16071
6.2	39003	36566	34416	15.2	23387	18858	15799
6.4	38665	36122	33894	15.4	23093	18572	15532
6.6	38323	35676	33371	15.6	22803	18288	15270
6.8	37976	35219	32849	15.8	22516	18015	15105
7.0	37616	34776	32328	16.0	22234	17744	14764
7.2	37272	34324	31809	16.2	21954	17478	14518
7.4	36914	33872	31292	16.4	21678	17216	14279
7.6	36554	33419	30779	16.6	21406	16960	14043
7.8	36193	32966	30268	16.8	21137	16708	13812

STRENGTH OF STEEL COLUMNS OR STRUTS—*Continued.*

$\frac{L}{r}$	Ultimate strength in pounds per square inch.			$\frac{L}{r}$	Ultimate strength in pounds per square inch.		
	Square.	Pin and Square.	Pin.		Square.	Pin and Square.	Pin.
8.0	35828	32514	29762	17.0	20872	16459	13584
8.2	35462	32064	29260	17.2	20611	16216	13366
8.4	35095	31615	28763	17.4	20353	15977	13150
8.6	34727	31169	28272	17.6	20098	15742	12938
8.8	34358	30724	27787	17.8	19847	15512	12731
9.0	33988	30282	27306	18.0	19599	15286	15258
9.2	33611	29844	26832	18.2	19351	15063	12329
9.4	33249	29408	26364	18.4	19114	14845	12135
9.6	32880	28977	25903	18.6	18878	14630	11944
9.8	32511	28549	25448	18.8	18644	14420	11757
10.0	32143	28125	25000	19.0	18418	14218	11579
10.2	31776	27706	24559	19.2	18185	14010	11394
10.4	31411	27290	24125	19.4	17961	13811	11219
10.6	31054	26879	23698	19.6	17740	13616	11048
10.8	30684	26474	23279	19.8	17519	13422	10877
11.0	30324	26072	22866	20.0	17308	13235	10715
11.2	29965	25675	22460	20.2	17096	13050	10553
11.4	29608	25285	22063	20.4	16888	12868	10434
11.6	29247	24899	21671	20.6	16682	12690	10249
11.8	28903	24517	21288	20.8	16480	12515	10087

and from the above table, $P = 34800$ pounds per square inch. The area of the angle is 5.75 square inches, hence the crippling load is $5.75 \times 34800 = 200100$ pounds. The safe load in a roof-truss is $200100 \div 4 = 50025$ pounds. If medium steel had been used, the safe load becomes $200100 \div 3.6 = 55600$ pounds. According to Fowler's formula the safe load is $8250 \times 5.75 = 47400$ pounds.

23. End Bearing of Wood.—When a stress is transmitted to the ends of the fibers there must be a sufficient number to carry the load without too much compression or bending over. To illustrate, let a load P (Fig. 18) be

transmitted through a metal plate to the end of a wooden column, then the area $b \times d$ must be such that no crushing takes place.

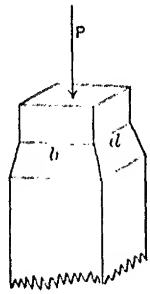

FIG. 18.

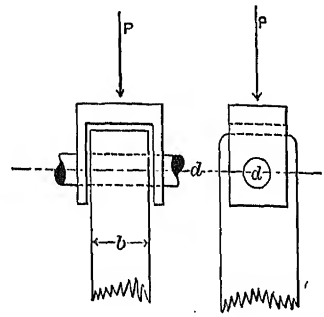

FIG. 18*a*.

TABLE OF SAFE END BEARING VALUES.

1000	1100	1200	1400	Lbs. per Sq. In.
Red Pine, Norway Pine, Cypress	White Pine, Northern or Short-leaf Yellow Pine, Cedar, Hemlock	Spruce, Eastern Fir, Douglas, Oregon and Yellow Fir	White Oak, Southern Long-leaf Pine or Georgia Yellow Pine	The values in this table have a factor of safety of 5

EXAMPLE. In Fig. 18 let $b = 12$ inches, $d = 4$ inches, and suppose the wood to be white oak; what is the safe load P? $P = 4 \times 12 \times 1{,}400 = 67200$ pounds.

23a. Bearing of Wood for Surfaces Inclined to the Fibers. In a large number of the connections in roof trusses it is necessary to cut one or both surfaces of contact between two members on an angle with the directions of the fibers. The allowable normal intensities of pressure upon such surfaces may be found from the

following formula, which is based upon the results of experiments:

$$r = q + (p - q)\left(\frac{\theta}{90}\right)^2,$$

where r = normal intensity on AC;

q = normal intensity on BC;

p = normal intensity on AB;

θ = angle of inclination of AC with direction of the wood fibers.

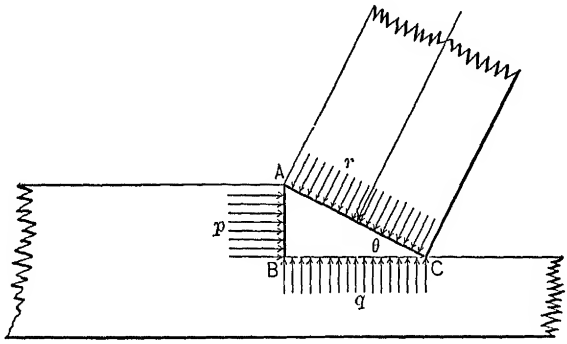

FIG. 18*b*.

SAFE BEARING VALUES FOR INCLINED SURFACES

Pounds per square inch.

θ	White Oak.	Long-leaf Yellow Pine.	Northern or Short-leaf Yellow Pine.	Douglas, Oregon, and Yellow Fir, Spruce and Eastern Fir.	White Pine, Cedar.	Red Pine, Norway Pine, Cypress.
0	500	350	250	200	200	200
10	511	363	260	212	211	210
20	544	402	292	249	244	239
30	600	467	344	311	300	289
40	677	557	418	397	377	358
50	778	674	513	509	478	447
60	900	816	628	644	600	555
70	1045	985	764	805	745	683
80	1211	1180	921	990	911	832
90	1400	1400	1100	1200	1100	1000

23b. End Bearing of Wood against Round Metal Pins.—In Fig. 18*a* the load P is transmitted to the wooden

safe value of P for this area is given by the formula which is based on the normal intensities on inclined surfaces:

$$P = bd(0.46p + 0.54q) = bdF,$$

where p = the allowable intensity of pressure against the ends of the fibers;

q = the allowable intensity of pressure across the fibers;

d = diameter of pin;

b = length of pin bearing against the wood;

P = total force which the pin can safely transmit in a direction parallel to the fibers.

APPROXIMATE VALUES OF F.

900	850	650	600	550	Lbs.perSq.In.
White Oak	Long-leaf Yellow Pine	Short-leaf Pine, Douglas, Oregon, Yellow Fir, Spruce, Eastern Fir	White Pine Cedar, Hemlock	Red Pine, Norway Pine, Cypress	The values in this table have a safety factor between 4 and 5

23c. Splitting Effect of Round Pins Bearing against the End Fibers of Wood.—The round pin shown in Fig. 18*a* not only bears against the end fibers of the wood, but also tends to split the timber. Fortunately this tendency is comparatively small.

23d. Cross Bearing of Wood against Round Pins.—If the direction of the stress is normal to the fibers the bearing value of the wood on the pin may be taken, the same as on a flat surface having a width equal to the

B4

diameter of the pin. The safe values to be used are given in Art. 25.

24. Bearing of Steel.—Since soft and soft-medium steel are practically homogeneous in structure, the same bearing value is used for round and flat surfaces. The diameter of the pin or rivet multiplied by the thickness of the plate through which it passes is taken as the bearing area. This is an approximation but is sufficient for practical purposes.

For soft or soft-medium steel the *safe* bearing value may be taken as 20000 pounds per square inch.

TABLE OF SAFE BEARING VALUES.

Diameter of Rivet.	Area in Sq. Inches.	BEARING VALUE FOR DIFFERENT THICKNESSES OF PLATE IN INCHES AT 20,000 POUNDS PER SQUARE INCH.					
		$\frac{1}{4}$	$\frac{5}{16}$	$\frac{3}{8}$	$\frac{7}{16}$	$\frac{1}{2}$	$\frac{9}{16}$
$\frac{3}{8}$	.1105	1875	2344	2813			
$\frac{1}{2}$	.1964	2500	3125	3750	4375	5000	
$\frac{5}{8}$	.3068	3125	3906	4688	5469	6250	7031
$\frac{3}{4}$	.4418	3750	4688	5625	6563	7500	8438
$\frac{7}{8}$	.6013	4375	5469	6563	7656	8750	9844
1	.7854	5000	6250	7500	8750	10000	11250

TABLE OF SAFE BEARING VALUES—*Continued.*

Diameter of Rivet.	Area in Sq. Ins.	BEARING VALUE FOR DIFFERENT THICKNESSES OF PLATE IN INCHES AT 20,000 POUNDS PER SQUARE INCH.						
		$\frac{5}{8}$	$\frac{11}{16}$	$\frac{3}{4}$	$\frac{13}{16}$	$\frac{7}{8}$	$\frac{15}{16}$	1
$\frac{3}{8}$	.1105							
$\frac{1}{2}$	.1964							
$\frac{5}{8}$	.3068	7813						
$\frac{3}{4}$	.4418	9375	10313	11250				
$\frac{7}{8}$	.6013	10938	12031	13125	14219	15313	16406	
1	.7854	12500	13750	15000	16250	17500	18750	20000

must be sufficient to resist crushing. This is a point very often overlooked in construction. In Fig. 19*a* the same

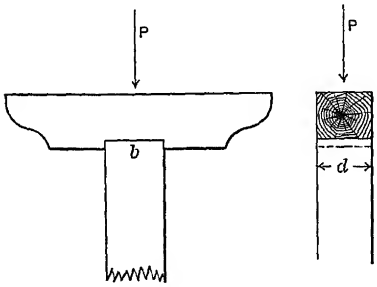

FIG. 19.

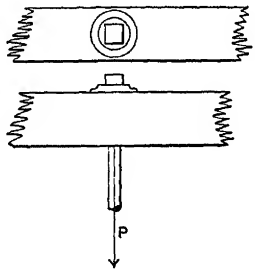

FIG. 19*a*.

TABLE OF SAFE BEARING VALUES.

150	200	250	350	500	Lbs. per Sq. In.
Hemlock, California Redwood	White Pine, Red Pine, Norway Pine, Spruce, Eastern Fir, Cypress, Cedar, Douglas Fir, OregonFir, Yellow Fir	Northern or Short-leaf-Yellow Pine, Chestnut	Southern Long-leaf or Georgia Yellow Pine	White Oak	The values in this table have a factor of safe ty of 4

conditions obtain. The washer must be of such a size that the area bearing upon the wood shall properly distribute the stress transmitted by the rod.

26. Bearing Across the Fibers of Steel. See Art. 24.

27. Longitudinal Shear of Wood.—In Fig. 20 let the piece *A* push against the notch in *B*, then the tendency is to push the portion above *ba* along the plane *ba*, or to shear lengthwise a surface *b* in length and *t* in width.

A similar condition exists in Fig. 20*a*. The splice may fail by the shearing along the grain the two surfaces *abc* and *a'b'c'*. A table of safe longitudinal shearing values is given below.

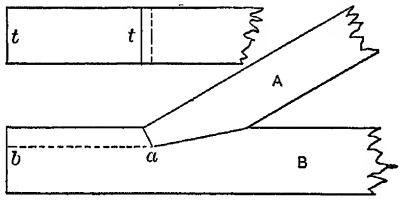

FIG. 20.

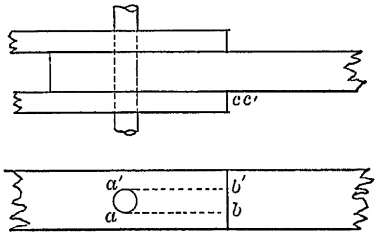

FIG. 20*a*.

TABLE OF SAFE LONGITUDINAL SHEARING VALUES.

100	150	200	Lbs. per Sq. In.
White Pine, Northern or Short-leaf Yellow Pine, Canadian White Pine, Canadian Red Pine, Spruce, Eastern Fir, Hemlock, California Redwood, Cedar	Southern Long-leaf or Georgia Yellow, Pine, Chestnut	White Oak	The values in this table have a factor of safety of 4
		130	
		Douglas, Oregon, and Yellow Fir	

28. Longitudinal Shear of Steel.—For all structures considered in this book the longitudinal shear of steel is

[illegible] at the ends is loaded with concentrated loads, as shown in Fig. 21, the maximum moment is readily found by means of the equilibrium polygon. Let this moment be called M, then for rectangular beams

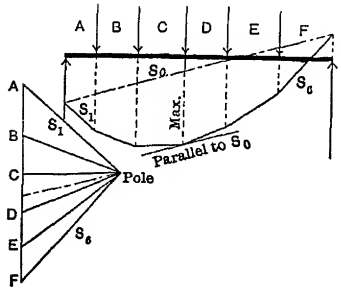

FIG. 21.

$$M = \tfrac{1}{6}Rbd^2,$$

where M = the maximum moment in inch-pounds;
b = the breadth of the beam in inches;
d = the depth of the beam in inches;
R = the allowable or safe stress per square inch in the extreme fiber.

If M is given in foot-pounds, then the second member of the above equation becomes $\frac{1}{72}Rbd^2$.

For a uniformly distributed load

$$M = \tfrac{1}{8}wl^2 = \tfrac{1}{6}Rbd^2,$$

where w = the load per linear inch of span;
l = the span in inches.

EXAMPLE.—An oak beam 6 inches deep has a span of 10 feet and carries a load of 100 pounds per linear foot. What must be the breadth of the beam to safely carry the load?

$M = \frac{1}{8}wl^2 = \frac{1}{8} \times 100 \times 10 \times 10 = 1250$ ft.-lbs. or 15000 in.-lbs.

7200

Hence a $2\frac{1}{8}'' \times 6''$ white-oak beam will safely carry the load; but the weight of the beam has been neglected, and consequently the breadth must be increased to, say, $2\frac{5}{8}$ inches. A second calculation should now be made with the weight of the beam included.

TABLE OF SAFE VALUES OF R FOR WOOD.

600	700	750	800	1000	1200
Hemlock	White Pine, Spruce, Eastern Fir, Cedar	California Redwood	Douglas, Oregon, and Yellow Fir, Red Fir, Red Pine, Cypress, Chestnut, California Spruce, Norway Pine, Washington Fir or Pine (Red Fir)	Northern or Short-leaf Yellow Pine	Southern Long-leaf or Georgia Yellow Pine, White Oak

The above values are pounds per square inch. Factor of safety 6. See Table XVI, page 139.

The transverse strength of wood as considered above assumes that the plane of the loads is parallel to the side of the timber having the dimension d. In case the plane of the loads makes the angle θ with the axis BB, Fig. 21a,

$$M \cos \theta = \tfrac{1}{6}R'bd^2 \quad \text{or} \quad R' = \frac{6M \cos \theta}{bd^2};$$

$$M \sin \theta = \tfrac{1}{6}R''b^2d \quad \text{or} \quad R'' = \frac{6M \sin \theta}{b^2d};$$

and $$R' + R'' = R.$$

usually easier to assume values for b and d and then from the first three expressions determine the value of R. If this is greater than the allowable value for the kind of wood to be used, a new trial must be made. It is seldom necessary to make more than two trials.

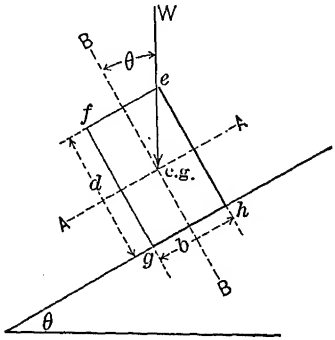

FIG. 21*a*.

EXAMPLE.—Assume that a white oak purlin is placed, as shown in Plate I, so that the angle θ, Fig. 21*a*, is 30°, and that the moment of the vertical loads is 20000 inch-pounds. If the depth of the purlin is assumed as 10″ and the breadth as 8″, then,

$$R' = \frac{6M \cos \theta}{bd^2} = \frac{6 \times 20000 \times 0.866}{8 \times 100} = 129.9,$$

$$R'' = \frac{6M \sin \theta}{b^2 d} = \frac{6 \times 20000 \times 0.5}{64 \times 10} = 937.5,$$

and

$$R = R' + R'' = 129.9 + 937.5 = 1067 \text{ lbs.}$$

This is the compressive fiber stress at e or the tensile fiber stress at g, Fig. 21*a*.

Since 1067 is less than the allowable value of R for white oak, the purlin is safe. See Table XVI.

where M = the maximum moment in inch-pounds;

I = the moment of inertia (given in the manufacturers' pocket-books);

v = the distance of the outermost fiber from the neutral axis;

R = the safe stress in pounds per square inch in the outermost fiber;

$S = \frac{I}{v}$ is given in the manufacturers' pocket-books for each shape rolled for the conditions usually obtaining in practice.

The safe value of R for soft steel may be taken as 16000 pounds.

EXAMPLE.—Suppose the oak beam in Article 29 is replaced by a steel channel. What must be its size and weight?

$$M = 15000 = RS = 16000S; \therefore S = 0.94$$

From any of the manufacturers' pocket-books, a 3-inch channel weighing 4 pounds per linear foot has $S = 1.1$. The moment due to the weight of the channel is $\frac{1}{8}wl^2 = \frac{1}{8} \times 4 \times 10 \times 10 = 50$ ft.-lbs. or 600 in.-lbs.; hence the total moment is 15600 inch-pounds, and the required value of $S = \frac{15600}{16000} = 0.98$, which is less than 1.1. This being the case, a 3-inch channel weighing 4 pounds per foot will be safe. (See Tables at end of book.)

rectangular axes, passing through the center of gravity of the section, about one of which the moment of inertia is a maximum and about the other a minimum. Sufficient data is given in the tables of properties of the various steel shapes to completely determine these axes and the maximum and minimum moments of inertia.

The following formulas for determining the maximum fiber stress for a given moment produced by loads in a plane making an angle with the principal axes, include most of the cases found in practice:

I Beam.

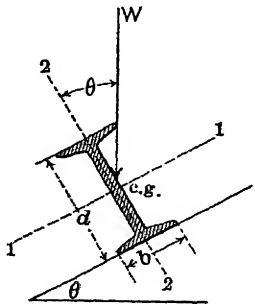

$$M \cos \theta = \frac{R' I_{1-1}}{\frac{1}{2} d} \quad \text{or} \quad R' = \frac{M \cos \theta}{2 I_{1-1}} d;$$

$$M \sin \theta = \frac{R'' I_{2-2}}{\frac{1}{2} b} \quad \text{or} \quad R'' = \frac{M \sin \theta}{2 I_{2-2}} b;$$

$$R = R' + R''.$$

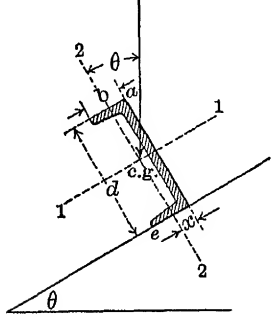

$$M \cos \theta = \frac{R' I_{1-1}}{\frac{1}{2} d} \quad \text{or} \quad R' = \frac{M \cos \theta}{2 I_{1-1}} d;$$

$$M \sin \theta = \frac{R'' I_{2-2}}{x} \quad \text{or} \quad R'' = \frac{M \sin \theta}{I_{2-2}} x.$$

These formulas refer to point a. For point e replace x by $b - x$.

$$R = R' + R''.$$

Angles and Z Bars.

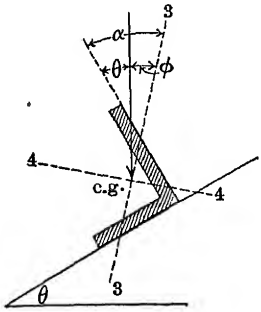

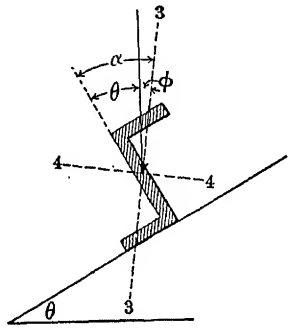

$$M \cos \phi = \frac{R' I_{4-4}}{v_{4-4}} \quad \text{or} \quad R' = \frac{M \cos \phi}{I_{4-4}} v_{4-4},$$

axis denoted by the subscript. The same fiber must be considered for both axes even if for one it is not the outermost fiber. The values for v are best determined from a full sized drawing. The particular fiber for which $R = R' + R''$ is a maximum can be found by trial. An inspection of the full size drawing will usually eliminate all but two possible positions.

EXAMPLE.—A $4'' \times 4'' \times \frac{1}{2}''$ angle used as a beam has a span of 10 feet and is loaded with 150 pounds per foot of span, the plane of the loads being parallel to one leg of the angle. What is the maximum fiber stress?

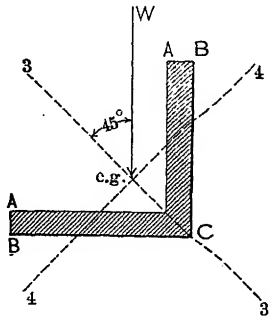

$I_{4\text{-}4} = 2.28$, $I_{3\text{-}3} = 8.84$, $\phi = 45°$, $M = 22500$ in.-lbs.

For the Fiber at A

$$R' = \frac{22500 \times 0.707}{8.82} 2.83 = 5105$$

$$R'' = \frac{22500 \times 0.707}{2.28} 1.16 = 8093$$

$$R = R' + R'' = 13198 \text{ lbs.}$$

Inspection shows that the maximum fiber stress cannot be at C, hence 15008 is the maximum sought.

31. Special Case of the Bending Strength of Metal Pins.—Where pins are used to connect several pieces, as in Fig.

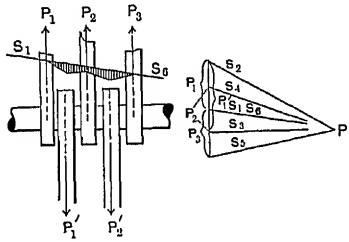

FIG. 22.

22, the moments of the outside forces can be determined in the usual way.

This moment $M = \frac{RI}{v} = R(0.098d^3)$,

where d = the diameter of the pin in inches;

R = the safe stress in the outer fiber in pounds per square inch.

The table on page 36 gives the safe values of M for various sizes of bolts or pins. For wrought iron use $R = 15000$, and for steel use $R = 25000$.

32. Shearing Across the Grain of Bolts, Rivets, and Pins.—For wrought-iron bolts use 7500 pounds per square inch, and for steel 10000 pounds. The safe shearing values of rivets and bolts are given on page 44. See Table XVIII.

1	.785	1470	1770	1960	2210	2450
1 1/8	.994	2100	2520	2800	3150	3490
1 1/4	1.227	2900	3450	3830	4310	4790
1 3/8	1.485	3830	4590	5100	5740	6380
1 1/2	1.767	4970	5960	6630	7460	8280
1 5/8	2.074	6320	7580	8430	9480	10530
1 3/4	2.405	7890	9470	10520	11840	13150
1 7/8	2.761	9710	11650	12940	14560	16180
2	3.142	11780	14140	15710	17670	19630
2 1/8	3.547	14130	16960	18840	21200	23550
2 1/4	3.976	16770	20130	22370	25160	27960
2 3/8	4.430	19730	23670	26300	29590	32880
2 1/2	4.909	23010	27610	30680	34510	38350
2 5/8	5.412	26640	31960	35520	39960	44400
2 3/4	5.940	30630	36750	40830	45940	51040
2 7/8	6.492	34990	41990	46660	52490	58320
3	7.069	39730	47680	52970	59600	66220
3 1/8	7.670	44940	55930	59920	67410	74900
3 1/4	8.296	50550	60660	67400	75830	84250
3 3/8	8.946	56610	67940	75480	84920	94350
3 1/2	9.621	63140	75770	84180	94710	105230
3 5/8	10.321	70150	84180	93530	105220	166910
3 3/4	11.045	77660	93190	103540	116490	129430
3 7/8	11.793	85690	102820	114250	128530	142810
4	12.566	94250	113100	125660	141370	157080

SAFE SHEARING VALUES OF RIVETS AND BOLTS.

Diam. of Rivet.	Area in Square Inches.	Single Shear at 7500 lbs.	Double Shear at 15000 lbs.	Single Shear at 10000 lbs.	Double Shear at 20000 lbs.
3/8	.1105	828	1657	1105	2209
1/2	.1964	1473	2945	1964	3927
5/8	.3068	2301	4602	3068	6136
3/4	.4418	3313	6627	4418	8836
7/8	.6013	4510	9020	6013	12026
1	.7854	5891	11781	7854	15708

33. Shearing Across the Grain of Wood.

SAFE TRANSVERSE SHEARING VALUES.

400	500	600	Lbs. per Sq. In.
Cedar	White Pine, Chestnut	Hemlock	Factor of safety 4
750	1000	1250	Lbs. per Sq. In.
Spruce, Eastern Fir	White Oak, Northern or Short-leaf Yellow Pine	Southern Long-leaf or Georgia Yellow Pine	Factor of safety 4

34. Wood in Direct Tension.

SAFE TENSION VALUES.

600	700	800	Lbs.perSq.In.
Hemlock, Cypress	White Pine, California Redwood, Cedar	Spruce, Eastern Fir, Douglas Fir, Oregon Fir, Yellow Fir, Red Pine	Factor of safety 10
900	1000	1200	Lbs.perSq.In.
Northern or Short-leaf Yellow Pine	Washington Fir or Pine, Canadian White Pine and Red Pine	White Oak, Southern Long-leaf or Georgia Pine	Factor of Safety 10

35. Steel and Wrought Iron in Direct Tension.—For wrought iron use 12000 pounds per square inch, for steel use 16000 pounds per square inch. See Table XVIII.

CHAPTER IV.

ROOF-TRUSSES AND THEIR DESIGN.

36. Preliminary Remarks.—Primarily the function of a roof-truss is to support a covering over a large floor-space which it is desirable to keep free of obstructions in the shape of permanent columns, partitions, etc. Train-sheds, power-houses, armories, large mill buildings, etc., are examples of the class of buildings in which roof-trusses are commonly employed.

The trusses span from side wall to side wall and are placed at intervals, depending to some extent upon the architectural arrangement of openings in the walls and upon the magnitude of the span. The top members of the trusses are connected by members called purlins, running usually at right angles to the planes of the trusses. The purlins support pieces called rafters, which run parallel to the trusses, and these carry the roof covering and any other loading, such as snow and the effect of wind.

The trusses, purlins, and rafters may be of wood, steel, or a combination of the two materials.

37. Roof Covering.—This may be of various materials or their combinations, such as wood, slate, tin, copper, clay tiles, corrugated iron, flat iron, gravel and tar, etc.

The weights given for roof coverings are usually per *square*, which is 100 square feet.

38. **Wind Loads.**—The actual effect of the wind blowing against inclined surfaces is not very well known. The formulas in common use are given below:

Let θ = angle of surface of roof with direction of wind;

F = force of wind in pounds per square foot;

A = pressure normal to roof, $= F \sin \theta^{1.84 \cos \theta - 1}$;

B = pressure perpendicular to direction of the wind $= F \cot \theta \sin \theta^{1.84 \cos \theta}$;

C = pressure parallel to the direction of the wind $= F \sin \theta^{1.84 \cos \theta}$.

(*Carnegie.*)

Angle θ	5°	10°	20°	30°	40°	50°	60°	70°	80°	90°
$A = F \times$	0.125	0.24	0.45	0.66	0.83	0.95	1.00	1.02	1.01	1.00
$B = F \times$	0.122	0.24	0.42	0.57	0.64	0.61	0.50	0.35	0.17	0.00
$C = F \times$	0.010	0.04	0.15	0.33	0.53	0.73	0.85	0.96	0.99	1.00

39. **Pitch of Roof.**—The ratio of the rise to the span is

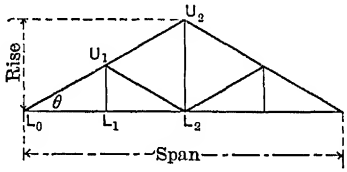

FIG. 23.

called the pitch, Fig. 23 The following table gives the angles of roofs as commonly constructed:

1/5	21	48	0.37137	0.92849	0.39997	1.07702
1/6	18°	26′	0.31620	0.94869	0.33330	1.05408

40. Transmission of Loads to Roof-trusses.—Fig. 24 shows a common arrangement of trusses, purlins, and rafters, so that all loads are finally concentrated at the apexes B, C,

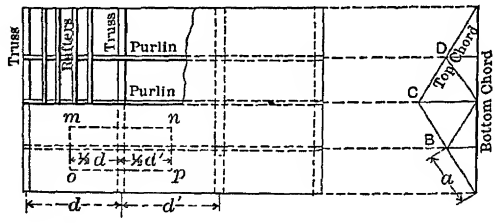

FIG. 24.

D, etc., of the truss. Then the total weight of covering, rafters, and purlins included by the dotted lines mn, np, po, and om will be concentrated at the vertex B. The total wind load at the vertex B will be equal to the normal pressure of the wind upon the area $mnop$.

41. Sizes of Timber.—The nominal sizes of commercial timber are in even inches, as $2'' \times 4''$, $2'' \times 6''$, $4'' \times 4''$, etc., and in lengths of even feet, as $16'$, $18'$, $20'$, etc. The actual or standard sizes are smaller than the nominal sizes.

Table XV gives the standard sizes for long-leaf pine, Cuban pine, short-leaf pine, and loblolly pine.

books. These are readily obtained and cost less per pound than the "special" shapes.

Ordinarily all members of steel roof-trusses are composed of two angles placed back to back, sufficient space being left between them to admit a plate for making connections at the joints. See Tables IX–XII.

43. Round Rods.—In wooden trusses the vertical tension members, and diagonals when in tension, are made of round rods. These rods should be upset * at the ends so that when threads are cut for the nuts, the diameter of the rod at the root of the thread is a little greater than the diameter of the body of the rod. It is common practice to buy stub ends—that is, short pieces upset—and weld these to the rods. Unless an extra-good blacksmith does the work the upsets should be made upon the rod used, without welds of any kind. Very long rods should not be spliced by welding, but connected with sleeve-nuts or turnbuckles.

Upset ends, turnbuckles, and sleeve-nuts are manufactured in standard sizes and can be purchased in the open market. See Table VII.

44. Bolts.—The sizes of bolts commonly used in wooden roof-trusses are $\frac{3}{4}''$ and $\frac{7}{8}''$ in diameter. Larger sizes are sometimes more economical if readily obtained. $\frac{3}{4}''$ and $\frac{7}{8}''$ bolts can be purchased almost anywhere. Care should be taken to have as many bolts as possible of the same size,

* Upsets should not be made on steel rods unless they are annealed afterwards.

different shapes are given in the manufacturers' pocket-books. See Tables III, IV, and V.

46. Local Conditions.—In making a design local markets should be considered. If material can be purchased from local dealers, although not of the sizes desired, it will often happen that even when a greater amount of the local material is used than required by the design, the total cost will be less than if special material, less in quantity, had been purchased elsewhere. This is especially true for small structures of wood.

CHAPTER V.

DESIGN OF A WOODEN ROOF-TRUSS.

47. Data.

Wind load = 40 pounds per square foot of vertical projection of roof.

Snow load = 20 pounds per square foot of roof.

Covering = slate 14″ long, $\frac{1}{4}$″ thick = 9.2 pounds per square foot of roof.

Sheathing = long-leaf Southern pine, $1\frac{1}{8}$″ thick = 4.22 pounds per square foot of roof.

Rafters = long-leaf Southern pine, $1\frac{5}{8}$″ thick.

Purlins = long-leaf Southern pine.

Truss = long-leaf Southern pine, for all members except verticals in tension, which will be of soft steel.

Distance c. to c. of trusses = 10 feet.

Pitch of roof = $\frac{1}{3}$.

Form of truss as shown in Fig. 25.

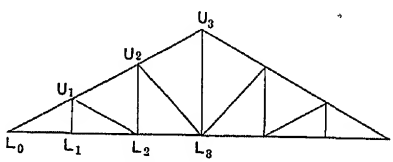

Span 60′ Rise 20′

FIG. 25.

End bearing.....	Art. 23,	1400 lbs.
End bearing against bolts.....	Art. 23*b*,	850 lbs.
Compression across the grain.....	Art. 25,	350 lbs.
Transverse stress—extreme fiber stress,	Art. 29,	1200 lbs.
Shearing with the grain.....	Art. 27,	150 lbs.
Shearing across the grain.....	Art. 33,	1250 lbs.

Columns and Struts. Values given in Art. 21.

STEEL.

Tension with the grain.....	Art. 35,	16000 lbs.
Bearing for rivets and bolts.....	Art. 24,	20000 lbs.
Transverse stress—extreme fiber stress,	Art. 30,	16000 lbs.
Shearing across the grain.....	Art. 32,	10000 lbs.
Extreme fiber stress in bending (pins),	Art. 31,	25000 lbs.

49. Rafters.—The length of each rafter c. to c. of purlins is $10 \times \sec \theta = 10 \times 1.2 = 12$ feet, and hence the area *mnop*, Fig. 24, is $12 \times 10 = 120$ square feet.

VERTICAL LOADS.

Snow	$= 20.00 \times 120 =$	2400 lbs.
Slate	$= 9.20 \times 120 =$	1104 lbs.
Sheathing	$= 4.22 \times 120 =$	506 lbs.
	$33\ 42 \times 120 =$	4010 lbs.

The normal component of this load is $4010 \times \cos \theta$, or $4010 \times 0.832 = 3336$ pounds.

The normal component of the wind is (Art. 38) about $40 \times 0.70 = 28$ lbs. per square foot, and the total, $28 \times 120 = 3360$ lbs.

The total normal load supported by the rafters, exclusive of their own weight, $= 3336 + 3360 = 6696$ lbs. $6696 \div 12 = 558$ lbs. per linear foot of span of the rafters.

Since the thickness of the rafters has been taken as $1\frac{5}{8}''$, either the number of the rafters or their depth must be assumed.

Assuming the depth as $7\frac{1}{2}''$, the load per *linear foot* which each rafter can safely carry is (Art. 29), (Table XV),

$$\frac{(wl)l}{8} = \tfrac{1}{6}Rbd^2,$$

$$\frac{wl}{8} \times 12 \times 12 = 1200 \times 15.23 = 18276;$$

$$\therefore \quad w = 85 \text{ pounds.}$$

$558 \div 85 = 6.56$ = number of $1\frac{5}{8}'' \times 7\frac{1}{2}''$ rafters required.

To allow for the weight of the rafters and the component of the vertical load which acts along the rafter, eight rafters will be used. If a rafter is placed immediately over each truss, the spacing of the rafters will be $10 \times 12 \div 8 = 15$ inches c. to c.

The weight of the rafters is $12.2 \times 8 \times 3.75 = 366$ lbs.

50. Purlins.—The total load normal to the roof carried by one purlin, exclusive of its own weight, is $6696 + 366 \times 0.832 = 7000$ lbs. Although this is concentrated in loads of $7000 \div 8 = 875$ lbs. spaced $15''$ apart, yet it may be

$= 105000$ inch-pounds. The component of the vertical load parallel to the rafter is $4010 \times 0.555 = 2226$ pounds and the moment of this at the center of the purlin is $\frac{1}{8}(2226) \times 10 \times 12 = 33390$ inch-pounds. The purlin resists these two moments in the manner shown by Fig. 25*a*.

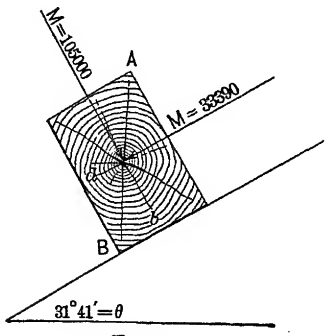

FIG. 25*a*.

(Since the rafters rest on top of the purlin the force parallel to the rafters produces torsional stresses in the purlin. There is also an unknown wind force parallel to the rafters which produces torsional stresses of opposite character and reduces the moment 33390. Both of these effects have been neglected.) Let $b = 7\frac{1}{2}''$ and $d = 9\frac{1}{2}''$. The fiber stress at B, Fig. 25*a*, will be the sum of the two fiber stresses produced by the two moments. For the force normal to the rafter $R' = 6 \times 105000 \div 7\frac{1}{2}(9\frac{1}{2})^2 = 932$. For the force parallel to the rafter $R'' = 6 \times 33390 \div 9\frac{1}{2}(7\frac{1}{2})^2 = 375$, $R' + R'' = 932 + 375 = 1307$ lbs. This is a little greater than the allowable fiber stress, which is 1200 lbs. Hence the next larger size of timber must be used, or a $10'' \times 10''$ piece. The weight of the purlin is 282 pounds.

51. Loads at Truss Apexes.—Exclusive of the weight of the truss the vertical loads at each apex, U_1, U_2, U_3, U_4, and U_5, Fig. 25, is

Snow, slate, sheathing	Art. 49,	4010 lbs.
Rafters	Art. 49,	366 lbs.
Purlins	Art. 50,	282 lbs.
		4658 lbs.

The weight in pounds of the truss may be found from the formula $W = \frac{3}{4}dL(1 + \frac{1}{10}L)$, where d is the distance in feet c. to c. of trusses, and L the span in feet. Substituting for d and L,

$$W = \frac{3}{4} \times 10 \times 60(1 + \frac{1}{10} \times 60) = 3150 \text{ lbs.}$$

The full apex load is $\frac{3150}{6} = 525$ lbs., and hence the total vertical load at each apex U_1–U_5, inclusive, is $4658 + 525 = 5183$ lbs. In case the top chords of the end trusses are cross-braced together to provide for wind pressure, etc., this load would be increased about 75 or 100 lbs.

For convenience, and since the roof assumed will require light trusses, the apex loads will be increased to 6000 lbs. In an actual case it would be economy to place the trusses about 15 feet c. to c.

The load at the supports is $\frac{6000}{2} = 3000$ lbs.

Wind.—The wind load for apexes U_1 and U_2 is 3360 lbs. (Art. 49), and at apexes L_0 and U_4 the load is $\frac{3360}{2} = 1680$ lbs. For the determination of stresses let the wind apex load be taken as 3400 lbs., and the half load as 1700 lbs.

In passing, attention may be called to the fact that the weight of the truss is less than 10 per cent. of the load it has to support exclusive of the wind; hence a slight error in assuming the truss weight will not materially affect the stresses in the several members of the truss.

52. Stresses in Truss Members.—Following the principles explained in Chapter II, the stress in each piece is readily determined, as indicated on Plate I.

Having found the stresses due to the vertical loads, the wind * loads when the wind blows from the left and when it blows from the right, these stresses must be combined in the manner which will produce the greatest stress in the various members. The wind is assumed to blow but from one direction at the same time; that is, the stress caused by the wind from the right cannot be combined with the stress due to the wind from the left.

In localities where heavy snows may be expected it is best to determine the stresses produced by snow covering but one half of the roof as well as covering the entire roof.

For convenience of reference the stresses are tabulated here.

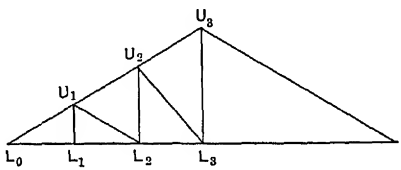

STRESSES.

	Vertical Loads.	Wind Left.	Wind Right.	Maximum Stresses.
L_0U_1	+27200	+7300	+5600	+34500
U_1U_2	+21700	+5800	+5600	+27500
U_2U_3	+16300	+4400	+5600	+21900
L_0L_1	−22600	−8700	−2600	−31300
L_1L_2	−22600	−8700	−2600	−31300
L_2L_3	−18100	−5600	−2600	−23700
U_1L_1	0	0	0	0
U_2L_2	−3000	−2000	0	−5000
U_3L_3	−12000	−4100	−4100	−16100
U_1L_2	+5400	+3700	0	9100
U_2L_3	+7600	+5100	0	12700

+ signifies compression.

* Some engineers consider only the lee side of the roof covered with snow when wind stresses are combined with the dead and snow load stresses.

53. Sizes of Compression Members of Wood.

Piece L_0U_1. Stress $= + 34500$.

Since the apex U_1 is held in position vertically by the truss members, and horizontally by the purlins, the *unsupported* length of L_0U_1 as a column is 12 feet.

To determine the size a least dimension must be assumed and a trial calculation made. This will be better explained by numerical calculations.

Let the least dimension be assumed as $5\frac{1}{2}''$, then $\frac{l}{d} = \frac{12 \times 12}{5\frac{1}{2}} = 26$, and from page 24, $P = 3086$ lbs. per square inch. The safe or allowable value is $\frac{P}{4} = \frac{3086}{4} = 771$ lbs. per square inch. Hence $34500 \div 771 = 44.7$ = number of square inches required. If one dimension is $5\frac{1}{2}''$, the other must be $9\frac{1}{2}''$, or a piece $5\frac{1}{2}'' \times 9\frac{1}{2}'' = 52.3$ square inches, $12'$ long, will safely carry the stress 34500 lbs. This is the standard size of a $6'' \times 10''$ timber (Table XV). If the table on page 26 is used the safe strength per square inch, for $d = 5\frac{1}{2}$, is 790 pounds and the required area is is $34500 \div 790 = 43.7$ square inches. Since a $6'' \times 8''$ piece has an actual area of but 41.3 square inches, the next larger size must be used, or a $6'' \times 10''$ piece, the same as found in the first trial. A piece $6'' \times 10''$ has a much greater stiffness in the $10''$ direction than in the $6''$ direction. For equal stiffness in the two directions the dimensions should be as nearly equal as possible. For example, in the above case try a piece $8'' \times 8''$, $l \div d = 144 \div 7\frac{1}{2} = 19$, $P = 3659$, and, with a safety factor of 4, the total load is 51400 pounds. This is 16900 pounds

greater than the stress in U_0U_1, while the area is only 4.0 square inches greater than the area of the $6'' \times 10''$ piece. By changing the shape and adding but about 7.6 per cent to the area the safe load has been increased nearly 50 per cent.

Pieces	U_1U_2	and	U_2U_3.
Stresses	$+ 27500$	and	$+ 20700$.

Letting $d = 5\frac{1}{2}''$, $27500 \div 771 = 35.7$ square inches required. Now $5\frac{1}{2}'' \times 7\frac{1}{2}'' = 41.3$ square inches, hence a $6'' \times 8''$ piece can be used. However, a change in size requires a splice, and usually the cost of bolts and labor for the splice exceeds the cost of the extra material used in continuing the piece L_0U_1 past the point U_2. For this reason, and because splices are always undesirable, the top chords of roof-trusses are made uniform in size for the maximum lengths of commercial timber, and, excepting in heavy trusses, the size of the piece L_0U_1 is retained throughout the top chord, even when one splice is necessary.

To illustrate the method of procedure when the size is changed, suppose U_2U_3 is of a different size from U_1U_2. To keep one dimension uniform the piece must be either $6''$ or $8''$ on one side. Try the least d as $5\frac{1}{2}''$, then $\frac{l}{d} = 26$, and $\frac{P}{4} = \frac{3086}{4} = 771$ lbs. $21900 \div 771 = 28.4$ square inches required. $28.4 \div 5\frac{1}{2}$ indicates that a $6'' \times 6''$ piece is necessary.

Commencing with L_0U_1 the nominal sizes composing the top chord are $6'' \times 10''$, $6'' \times 8''$, and $6'' \times 6''$. Since greater strength and stiffness can be obtained

without much additional expense by using the size $8'' \times 8''$ throughout, this size will be adopted.

Piece U_1L_1. Stress $= +9100$.

The unsupported length of this piece is 12 feet. Try least $d = 3\frac{3}{4}''$, then $\frac{P}{4} = 580$ and $9100 \div 580 = 16$ = the number of square inches required; hence a piece $4'' \times 6''$ with an actual area of 21.1 square inches can be used.

Piece U_2L_3. Stress $= +12700$.

The unsupported length $= 10 \times 1.6667 = 16.67$ feet,

$$\frac{l}{d} = \frac{16.67 \times 12}{3.75} = 53, \quad \frac{P}{4} = \frac{1730}{4} = 433 \text{ lbs.}$$

$12700 \div 433 = 29.3$ = number of square inches required, or a piece $4'' \times 10''$ must be used if $d = 3.75''$.

$$\text{Try } d = 5\tfrac{1}{2}'', \quad \text{then } \frac{l}{d} = 36 +, \quad \frac{P}{4} = \frac{2440}{4} = 610.$$

$12700 \div 610 = 20.8$ square inches required. The smallest size where $d = 5\frac{1}{2}''$ is $5\frac{1}{2}'' \times 5\frac{1}{2}'' = 30.25$ square inches.

In this case a $6'' \times 6''$ is more economical in material by 5.3 square inches of section, and will safely carry about 3000 lbs. greater load than the $4'' \times 10''$ piece.

54. Sizes of Tension Members of Wood.

Pieces L_0L_1 and L_1L_2. Stress $= -31300$.

From Art. 34 the allowable stress per square inch for Southern long-leaf pine is 1200 lbs.

$31300 \div 1200 = 26.1$ = the net number of square inches required. In order to connect the various pieces at the apexes, considerable cutting must be done for notches, bolts, etc., and where the fibres are cut off their usefulness to carry tensile stresses is destroyed. Practice indicates that in careful designing the net section must be increased by about $\frac{2}{3}$, or in this case the area required is $23 + 16 = 39$ square inches, therefore, a piece $5\frac{1}{2}'' \times 7\frac{1}{2}'' = 41.3$ square inches must be used. In many of the details which follow $8'' \times 8''$ pieces will be used for the bottom chord.

Piece L_2L_3. Stress $= -23700$.

In a similar manner this member can be proportioned, but since splices in tension members are very undesirable, owing to the large amount of material and labor required in making them, the best practice makes the number a minimum consistent with the market lengths of timber, and, consequently, in all but very large spans the bottom chord is made uniform in size from end to end.

55. Sizes of Steel Tension Members.

Piece U_1L_1. Stress $= 0$.

Although there is no stress in U_1L_1, yet, in order that the bottom chord may be supported at L_1, a round rod $\frac{3}{4}''$ in diameter will be used.

Piece U_2L_2. Stress $= -5000$.

The number of square inches required is (Art. 35), $5000 \div 16000 = 0.31$ square inches. A round rod $\frac{41}{64}$ inch in diameter is required, exclusive of the material cut away by the

threads at the ends. The area at the root of the threads of a $\frac{7}{8}''$ round rod is 0.42 square inches, hence a $\frac{7}{8}''$ round rod will be used. (Table VII.)

$$\text{Piece } U_3L_3. \quad \text{Stress} = -16100.$$

$16100 \div 16000 = 1.006$ square inches. A $1\frac{1}{4}''$ round rod has area of 1.227 square inches. This rod upset * (Table VII) to $1\frac{5}{8}''$ at the ends can be used.

If the rod is not upset a diameter of $1\frac{3}{8}''$ must be used, having an area of 1.057 square inches at the root of the threads. See Table XVIII.

Note that the above rods have commercial sizes.

56. Design of Joint L_0.—With $1\frac{1}{8}''$ Bolts.—A common form of joint at L_0 is shown in Fig. 26. The top chord rests in a notch *db* in the bottom chord, and, usually, altogether too much reliance is put in the strength of this detail. The notch becomes useless when the fibers fail along *db*, or when the bottom chord shears along *ab*. The distance *ab* is quite variable and depends upon the arrangement of rafters, gutters, cornice, etc. Let about $12''$ be assumed in this case, then it will safely resist a longitudinal shearing force of $12 \times 7\frac{1}{2} \times 150 = 13500$ lbs. (Art. 27). The area of the inclined surface due to the notch *db* equals $1.2(1\frac{1}{2} \times 7\frac{1}{2}) = 13.5$ square inches, if $dc = 1\frac{1}{2}''$. This will safely resist $13.5 \times 760 = 10300$ lbs. acting normal to the surface (Art. 23*a*), hence the value of the notch is but 10300 lbs., leaving $34500 - 10300 = 24200$ lbs. to be held in some other manner, in this case by $1\frac{1}{8}''$ bolts.

To save cutting the bottom chord for washers, and also

* Upsets on steel rods should not be used unless the entire rod is annealed after being upset at the ends.

to increase the bearing upon the supports of the truss it is customary to use a corbel or bolster, as shown in Fig. 26.

Let a single $\frac{7}{8}''$ bolt be placed $6''$ from the end of the bottom chord. This will prevent the starting of a crack at b, and also assist in keeping the corbel in place.

If it is assumed that the bolt holes are slightly larger

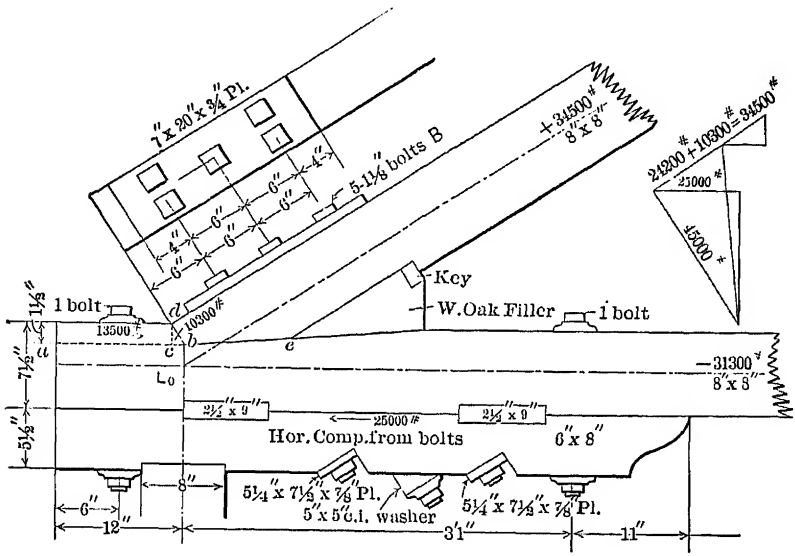

FIG. 26.

than the bolts, the instant that any motion takes place along *be* the bolts *B* will be subjected to tension. If friction along *be*, and between the wood and the metal-plate washer be neglected, the tension in the bolts may be determined by resolving 34500 − 10300 = 24200 into two components, one normal to the plane *be*, and the other in the direction of the bolts. Doing this the tension in the bolts is found to be about 45000 lbs. See Fig. 26.

From Table XVIII a single $1\frac{1}{8}''$ bolt will safely resist a tension of 11100 pounds, hence five bolts are required.

Each bolt resists a tension of $\frac{45000}{5} = 9000$ lbs., and hence the area of the washer bearing across the fibers of the wood must be $\frac{9000}{350} = 25.7$ □″ (Art. 25). As the standard cast-iron washer has an area of but 16.61 □″, a single steel plate will be used for all the bolts. The total area including $5 - 1\frac{1}{4}''$ holes for bolts will be $5(25.7 + 1.227) = 134.6$ □″, and as the top chord is $7\frac{1}{2}''$ wide, the plate will be assumed $7'' \times 20'' = 140$ □″.

The proper thickness of this plate can be determined approximately as follows:

The end of the plate may be considered as an overhanging beam fastened by the nuts or heads on the bolts and loaded with 350 lbs. per square inch of surface bearing against the wood.

The distance from the end of the plate to the nuts is about 3″, and the moment at the nuts is $350 \times 7 \times 3'' \times 3'' \times \frac{1}{2} = 11000$ inch-pounds. This must equal $\frac{1}{6} Rbd^2 = \frac{1}{6} Rbt^2 = \frac{1}{6} \times 16000 \times 7 \times t^2$, or $t^2 = \frac{11000}{18700} = 0.59$, and hence $t = 0.77'' = \frac{3}{4}''$ about. A $\frac{3}{4}''$ plate will be used (Art. 30). (See page 146.)

The tension in the bolts must be transferred to the corbel by means of adequate washers. Where two bolts are placed side by side, steel plates will be used and for single bolts, cast-iron washers.

Assuming the steel plate washers as normal to the direction of the bolts, they bear upon a wood surface which is inclined to the direction of the fibers. The permissible intensity of the pressure upon this surface is (Art. 23*a*) for $\theta = 33° \; 41'$, say, $34°$, about 500 pounds.

Since each bolt transmits a stress of 9000 pounds, the net area of the plate for two bolts is $2(9000 \div 500) = 36$ □″. Allowing for the bolt holes the gross area is about 38.5 □″. Making the corbel the same breadth as the bottom chord a plate $7\frac{1}{2}'' \times 5\frac{1}{4}'' = 39.3$ □″ will furnish the required area. The thickness of this plate is found in the manner explained for the plate in the top chord. A $\frac{7}{8}''$ plate is sufficient.

For the single bolt a bevel washer will be used. The net area bearing across the fibers of the wood must be $9000(\cos\theta = 0.832) \div 350 = 21.4$ □″, say, 23 □″, to allow for the bolt hole. A washer $5'' \times 5''$ will be used. The horizontal component of the stress in the bolt is $9000(0.555) = 5000$ pounds. This requires $5000 \div 1400 = 3.6$ □″ for end bearing against the wood, and $5000 \div 150 = 33.3$ □″ for longitudinal shear. A lug on the washer $\frac{3}{4}'' \times \frac{3}{4}'' \times 5''$ will provide area for the end bearing, and if placed at the edge of the washer nearer the center of the truss, there will be ample shearing area provided.

In the above work the washers have been designed for the stress which the bolts are assumed to take and not for the stress which the bolts can safely carry. As stated above, too much reliance should not be placed upon the shearing surface *ab*. Assuming this to fail the stress in the bolts becomes about 64200 pounds or 12960 pounds for each bolt, which is equivalent to a stress of 10500 pounds per square inch.

The horizontal component of the tension in the bolts having been transferred to the corbel, must now be transferred to the bottom chord. This is done by two white oak keys $2\frac{1}{2}'' \times 9''$ long. Each key will safely carry an

end fiber stress (Art. 23), of $1\frac{1}{4} \times 7\frac{1}{2} \times 1400 = 13100$ lbs., and two keys 2×13100, or 26200 lbs., which exceeds the total horizontal component of the stress in the bolts.

The safe longitudinal shear of each key is (Art. 27), $7\frac{1}{2}'' \times 9 \times 200 = 13500$, and for both keys $2 \times 13500 = 27000$ lbs., a little larger than the stress to be transferred.

The bearing of the keys against the end fibers of the corbel and the bottom chord is safe, as the safe value for long-leaf Southern pine is the same as for white oak.

The safe longitudinal shear in the end of the bottom chord is about $7\frac{1}{2}'' \times 12 \times 150 = 13500$ lbs. exclusive of the $\frac{7}{8}''$ bolt. The safe strength at the right end of the corbel is about the same. Between the keys there is ample shearing surface without any assistance from the bolts in both the corbel and the bottom chord. The keys have a tendency to turn and separate the corbel from the bottom chord. This will produce a small tension in the five inclined bolts if the corbel is not sufficiently stiff to hold them in place when the two end bolts are drawn up tight. One $\frac{3}{4}''$ bolt for each key of the size used here is sufficient to prevent the keys from turning when the bolts pass through or near the keys. See Art. 1, Appendix.

In order to prevent bending, and also to give a large bearing surface for the vertical component of 34500 lbs., a white oak filler is placed as shown in Fig. 26, and a small oak key employed to force it tightly into place.

The net area of the bottom chord must be $\frac{31300}{1200} = 26.1 \square''$ which inspection shows is exceeded at all sections in Fig. 26.

The form of joint just considered is very common, but

where the bolts were omitted entirely.

The joint as designed would probably fail before either the top or bottom chords gave out. If tested under a vertical load, the top chord would act as a lever with its fulcrum over the oak filler; this would throw an excessive tension upon the lower pair of bolts, and they would fail in the threads of the nuts.

Whenever longitudinal shear of wood must be depended upon, as in Fig. 26, bolts should always be used to bring an initial compression upon the shearing surface, thereby preventing to some extent season cracks.

56*a*. **Design of Joint** L_0—Bolts and Metal Plates.—The horizontal component of 34500 lbs. is 28700 lbs., which is transferred to the bottom chord by the two metal teeth let into the chord as shown in Fig. 27. Let the first plate be 7″ wide and 1″ thick and the notch 2″ deep, then the safe moment at the point where it leaves the wood is $\frac{1}{6} Rbt^2 = \frac{1}{6} \times 16000 \times 7 \times 1 \times 1 = 18670$ inch-pounds.

A load of 18670 lbs. acting 1″ from the bottom of the tooth gives a moment of $18670 \times 1 = 18670$ inch-pounds. This load uniformly distributed over the tooth $= \frac{18670}{2 \times 7} = 1330$ lbs. per square inch; as this is less than 1400 lbs., the safe bearing against the end fibers of the wood, the value of the tooth is $1330 \times 14 = 18670$ lbs. The shearing surface ahead of the tooth must be at least $\frac{18670}{150} = 125$ □″; and since the chord is $7\frac{1}{2}$″ thick, the length of this surface must be at least $\frac{125}{7.5} = 16.7$″, which is exceeded in Fig. 27.

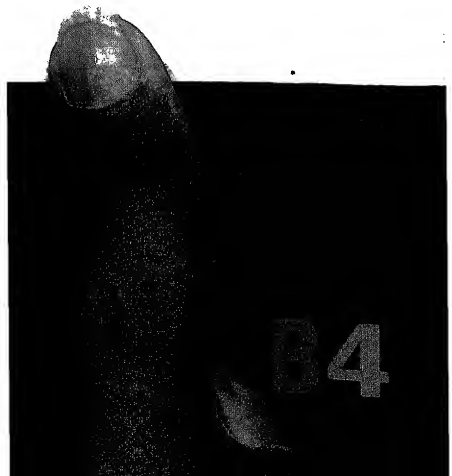

In like manner the value of the second tooth 7″ wide and $\frac{3}{4}$″ thick is found to be 14000 lbs., and hence the value of both teeth is 18670 + 14000 = 32670 lbs., which exceeds the total horizontal component of 34500 lbs. or 28700 lbs.

The horizontal component 28700 lbs. is transferred to the metal through the vertical plates at the end of the top chord, and these are held in place by two $\frac{7}{8}$″ bolts as

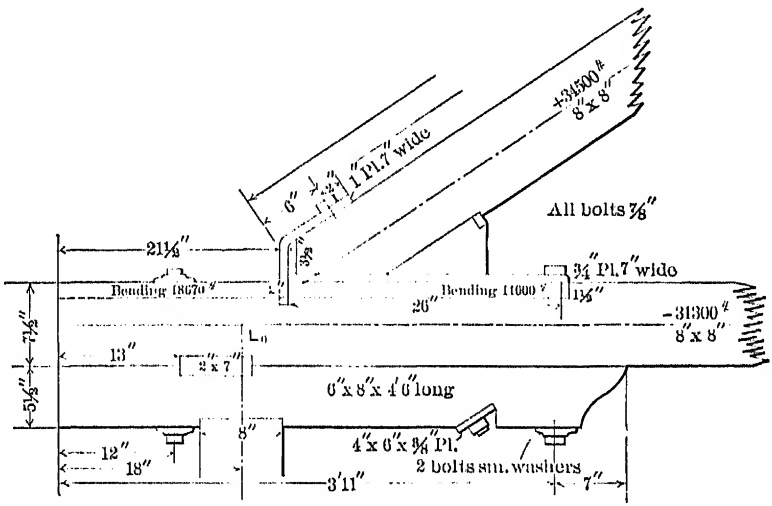

FIG. 27.

shown. The bearing against the end of the top chord exceeds the allowable value about 8800 lbs. if the vertical cut is $3\frac{1}{2}$″ as shown. The $\frac{3}{4}$″ plate is bolted to the bottom chord and the two bolts should be placed as near the hook as possible to prevent its drawing out of the notch. The amount of metal subject to tensile stresses and shearing stresses is greatly in excess of that required.

The net area of the bottom chord exceeds the amount required.

The corbel is not absolutely necessary in this detail, but it simplifies construction.

To keep the $\frac{3}{4}''$ plate in place two $\frac{7}{8}''$ bolts are employed. They also keep the tooth in its proper position.

The teeth should usually be about twice their thickness in depth, as then the bending value of the metal about equals the end bearing against the wood. This allows for a slight rounding of the corners in bending the plates.

Fig. 28 shows another form of joint using one $\frac{3}{4}''$ plate. The bolt near the heel of the plate resists any slight lifting action of the toe of the top chord, and also assists somewhat in preventing any slipping towards the left.

57. Design of Joint L_0—Nearly all Wood.—The strength of this joint depends upon the resistance of the shearing surfaces in the bottom chord and the bearing of wood against wood. The notches when made, as shown in Fig. 29, will safely resist the given stresses without any assistance from the bolts. A single bolt is passed through both chords to hold the parts together which might separate in handling during erection. The horizontal bolts in the bottom chord are put in to prevent any tendency of the opening of season cracks, starting at the notches. The vertical bolts serve a similar purpose, as well as holding the corbel or bolster in place.

58. Design of Joint L_0—Steel Stirrup.—Fig. 30 shows one type of stirrup joint, with a notch 2″ deep. The safe load in bearing on the inclined surface *ab* is 13700 lbs., and for shearing ahead of the notch 20300 lbs. This leaves 34500 − 13700 = 20800 which must be taken by the stirrup.

$$20800 \div \tan \theta = \frac{20800}{0.667} = 31200 \text{ lbs.} = \text{stress in stirrup rod.}$$

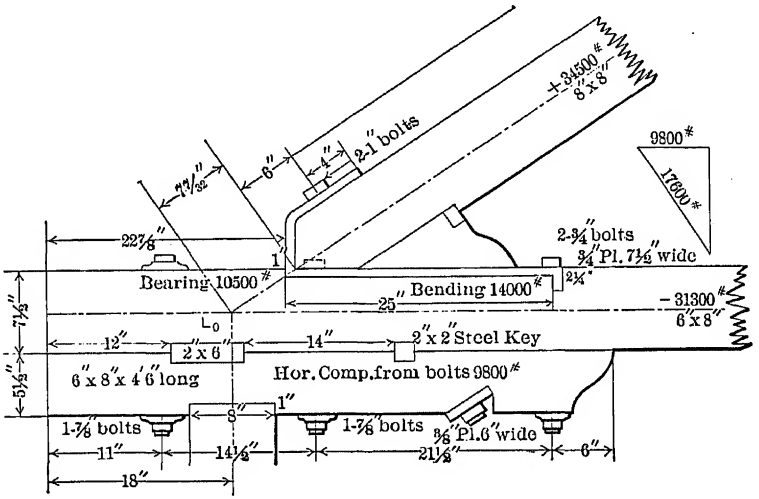
34500#
8"x 8"
9800#
17600#
2-1" bolts
4"
6"
22⅞"
1
2-¾" bolts
¾" Pl. 7½" wide
Bearing 10500#
25" Bending 14000#
2¼"
31300#
6"x 8"
7½"
12"
14"
2"x 6"
2"x 2" Steel Key
6"x 8"x 4'6" long
Hor. Comp. from bolts 9800#
5½"
1"
8"
1-⅞" bolts
1-⅞" bolts
⅜" Pl. 6" wide
11"
14½"
21½"
6"
18"

FIG 28.

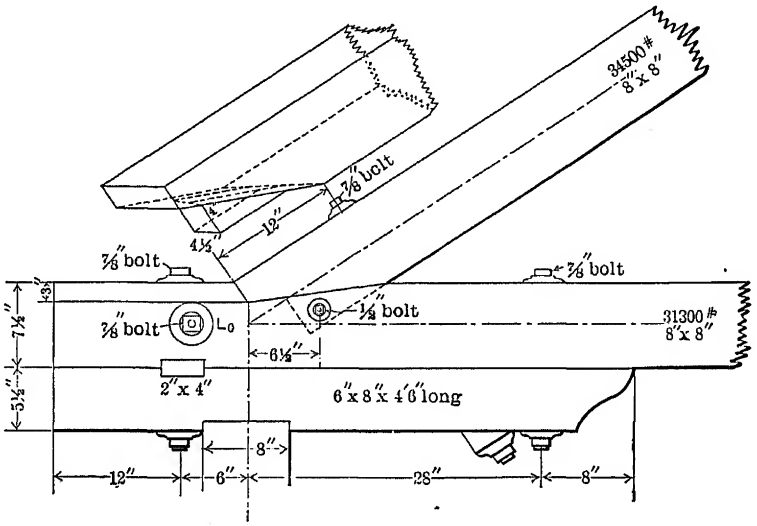
34500#
8"x 8"
⅞" bolt
12"
4½"
⅞" bolt
⅞" bolt
3"
7½"
⅞" bolt
½" bolt
31300#
8"x 8"
6½"
5½"
2"x 4"
6"x 8"x 4'6" long
8"
12"
6"
28"
8"

FIG. 29.

of the threads, of 0.893 □″.

To pass over the top chord the rod will be bent in the arc of a circle about $7\frac{1}{2}''$ in diameter, and rest in a cast-iron

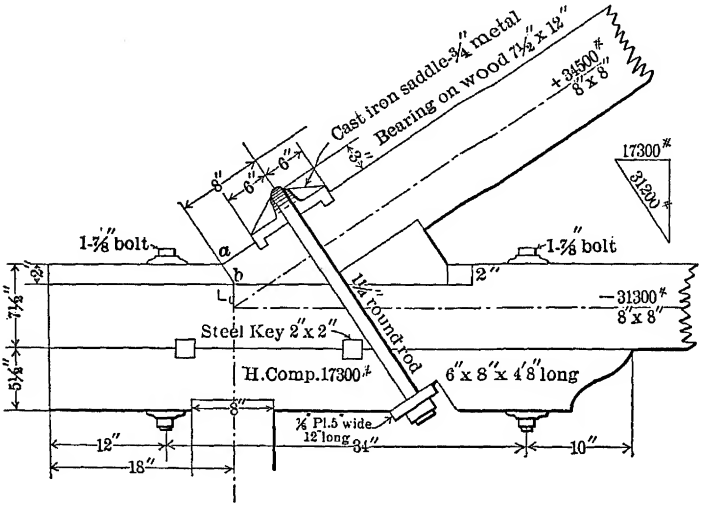

FIG. 30.

saddle, as shown in Fig. 30. The base of this saddle must have an area of $\frac{31200}{350} = 89$ □″. The size of the base will be $7\frac{1}{2}'' \times 12''$.

The horizontal stress 17300 transferred to the corbel will be amply provided for by the two keys which transfer it to the bottom chord.

59. Design of Joint L_0.—Steel Stirrup and Pin.—The detail shown in Fig. 31 is quite similar to that shown in Fig. 30, in the manner of resisting the stresses. In the

present case the tension in the steel rod is 19000 lbs., requiring a rod $1\frac{1}{8}''$ square. Loop eyes for a $2\frac{3}{4}''$ pin are formed on each end of the rod as shown. Each loop has a stress of 19000 lbs., and if this stress transmitted to the bottom chord is assumed to act $1\frac{7}{8}''$ from the outside surface of the chord, the moment of this stress is $19000(1\frac{7}{8}'' + \frac{1}{2}) = 45100$ inch-pounds, requiring a $2\frac{3}{4}''$ pin

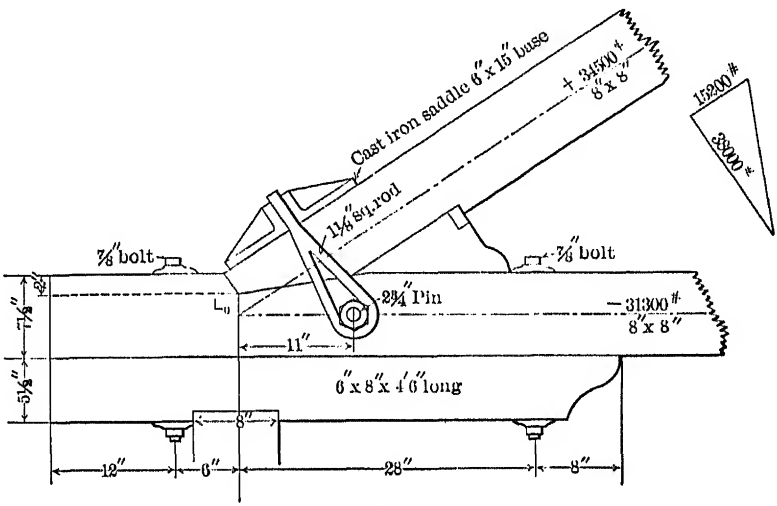

FIG. 31.

(Art. 31). The pin is safe against shearing, as $5.94 \times 10000 = 59400$ is much greater than the stress to be carried. The bearing of the pin against the end fibers of the chord is about 21000 lbs., while the permissible value is $2\frac{3}{4} \times 7\frac{1}{2} \times 850 = 17500$ lbs. (Art. 23*b*.) The bearing of the pin across the grain of the chord is excessive, as the vertical component of the stress in the stirrup is about 31000 lbs. It is practically impossible to use this detail with any reasonable factor of safety unless the chords are made

It may be well to state at this time that usually it is not possible to construct a joint so that the stress shall be divided between two different lines of resistance. In the joints designed care has been taken to make the division of the stress such that, if the wood shears ahead of the notch, the bolts can take the entire load with a unit stress well within the elastic limit of the steel. The washers, etc., will be over-stressed in the same proportion as the bolts.

60. Design of Joint L_0.—Plate Stirrup and Pin.—Fig. 32. —The method pursued in proportioning this type of joint

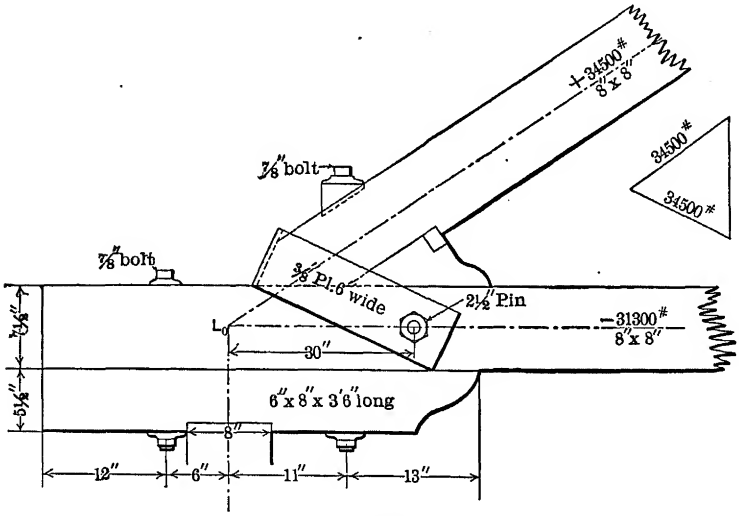

FIG. 32.

is the same as that followed in Art. 59. In this case the stirrup takes the entire component of 34500 lbs., the $\frac{7}{8}''$-bolt merely keeps the members in place. This detail has the

objection of excessive bearing stresses for the pin against the wood.

61. Design of Joint L_0.—Steel Angle Block.—Fig. 33.—This joint needs no explanation. Its strength depends upon the two hooks and the shearing resistance in the bottom chord. The diagonal $\frac{7}{8}''$ bolt is introduced to hold the block in its seat, and to reinforce the portion in direct com-

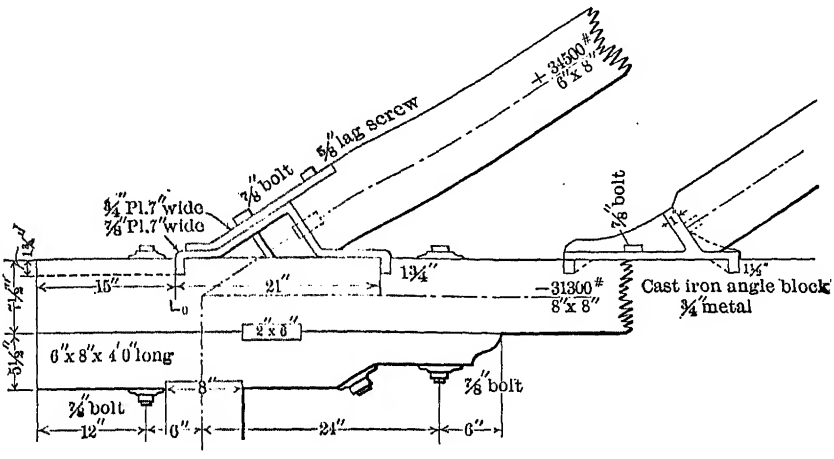

FIG. 33.

pression. The top chord is kept in position by the top plate, and a 1″-round steel pin driven into the end and passing through a hole in the block.

62. Design of Joint L_0.—Cast-iron Angle Block.—At the right, in Fig. 33, is shown a cast-iron angle block made of $\frac{3}{4}''$ or 1″ metal. It is held in place by two $\frac{7}{8}''$ bolts. The top chord is held in position by a cast-iron lug in the center of the block used to strengthen the portion of the block at its right end.

In all angle block joints care must be taken to have

63. Design of Joint L_0.—Special.—It sometimes happens that trusses must be introduced between walls and the truss concealed upon the outside. In this case the bottom chord rarely extends far beyond the point of intersec-

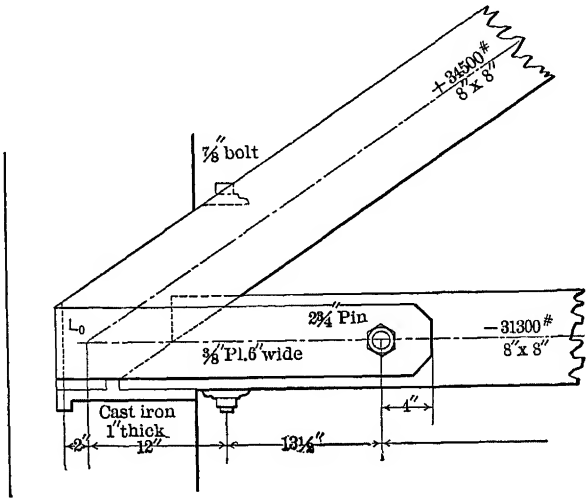

FIG. 34.

tion of the center lines of the two chords. The simplest detail for this condition is a flat plate stirrup and a square pin, as shown in Fig. 34. A pin $2\frac{3}{4}''$ square is required. The ends are turned down to fit $2\frac{1}{2}''$ holes in the $\frac{3}{8}''$ plate, and, outside of the plate the diameter is reduced for a small nut which holds a $3''$ plate washer in place. This detail fulfils all the conditions for bending, bearing shear, etc. If round pins are used, two will be required, each $2\frac{1}{2}''$ in diameter. These should be spaced about

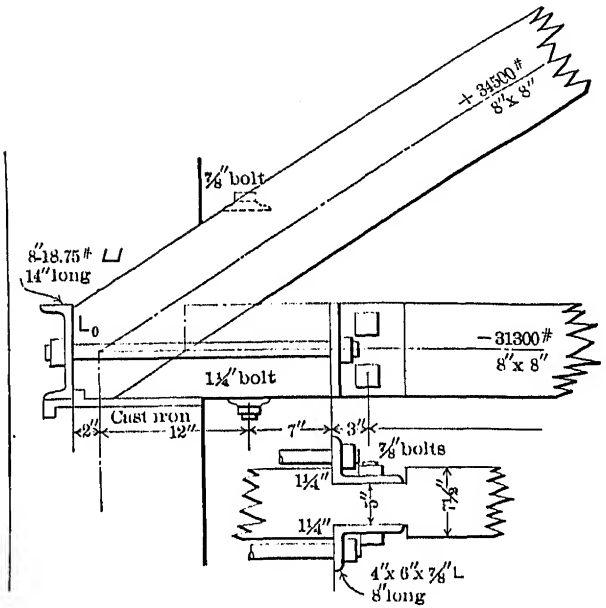
+34500#
8"x 8"
⅞" bolt
8"-18.75# ⊔
14" long
L0
−31300#
8"x 8"
1¼" bolt
Cast iron
2"
12"
7"
3"
⅞" bolts
1¼"
1¼"
4"x 6"x ⅞" L
8" long

FIG. 35.

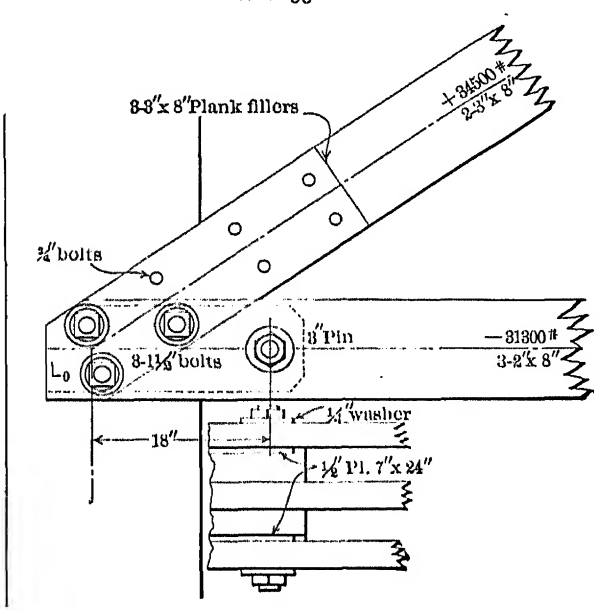
+34500#
2-3"x 8"
8-3"x 8" Plank fillers
¾" bolts
⅜" Pin
−31300#
3-2"x 8"
L0
8-1½" bolts
¼" washer
18"
½" Pl. 7"x 24"

FIG. 36.

ing stresses.

64. Design of Joint L_0.—Plank Members.—Fig. 36 shows a connection which fulfils all of the conditions of bearing, shear, bending, etc., excepting the bearing of the round bolts against the wood. The bearing intensities are about double those specified in Arts. 23*b* and 25.

65. Design of Joint L_0.—Steel Plates and Bolts.—Fig. 37 shows the joint L_0 composed of steel side plates, steel bearing plates, and bolts. The stresses are transmitted directly to the bearing plates against the end fibers of the wood, from the bearing plates to the bolts and by the bolts to the side plates. Assuming two bearing plates on each side of the top chord, the thickness of each plate will be $34500 \div 7\frac{1}{2} \times 1400 \times 4 = 0.82$ or $\frac{7}{8}''$. If six bolts are used the total bearing area for each bolt is $2d \times \frac{7}{8}$, and if the allowable bearing intensity is 20000 lbs., the diameter of each bolt is $34500 \div 12 \times \frac{7}{8} \times 20000 = 0.17$ in. If the side plates are but $\frac{5}{16}''$ thick the diameter becomes $34500 \div 12 \times \frac{5}{8} \times 20000 = 0.23$ in. The moment to be resisted by each bolt is $\frac{1}{12}(34500 \times 0.594) = 1708$ in.-lbs. According to Art. 31 this moment requires a bolt just a little larger than $\frac{7}{8}''$ diameter. A $1''$ bolt permits a moment of 2450 in.-lbs., which greatly exceeds the above, hence $\frac{7}{8}''$ bolts will be used. The shearing value of six bolts in double shear is about 72000 lbs. As is usually the case the bending values of the bolts govern the diam-

eters. The net distance between the bearing plates is $34500 \div 150 \times 7\frac{1}{2} \times 4 = 7.6$ in., say, 8″, to provide for longitudinal shear of the wood.

The stress in the bottom chord is not sufficiently different from that in the top chord to change any of the dimensions, so the same arrangement of plates and bolts will be used. In this detail the entire reaction should be transmitted into

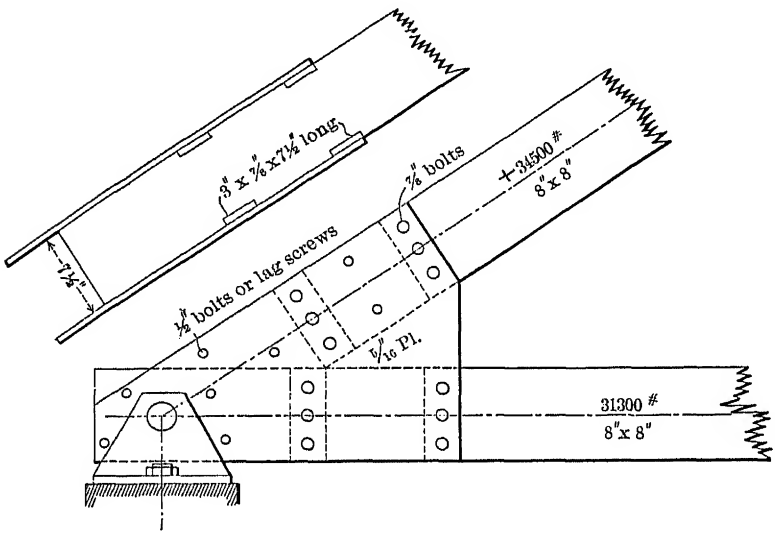

FIG. 37.

the side plates, the pin being placed as shown in Fig. 37. The pin must fulfil the conditions of bearing, shear, and bending.

66. Design of Wall Bearing.—In the designs of joint L_0 given above, no consideration has been made of the reaction at the support. The vertical and horizontal components of the reaction are shown on Plate I, 23500 lbs. and 3700 lbs. respectively. The vertical component must be provided

for in making the bearing area of the corbel sufficiently large so that the allowable intensity for bearing across the grain is not exceeded. In this case $23500 \div 350 = 67.1$ □″ is the minimum area required. If the corbel or bolster is made of white oak only 47 □″ are required. The horizontal component will usually be amply provided for by the friction between the corbel and the support, but anchor bolts should always be used in important structures. Whenever the stress in the bottom chord does not equal the horizontal component of the stress in the top chord then the difference between the two stresses must be transferred to the corbel or bolster and then to the support. In the above case $31300 - 28700 = 2600$ lbs. is the excess stress to be transferred. The joints as designed amply provide for this.

In all of the illustrations of the joint L_0 the center lines of the top and bottom chords are shown meeting in a point over the center of the support. This is theoretically correct but owing to the change in shape of the truss when fully loaded the top chord has a tendency to produce bending in the bottom chord which can be counterbalanced by placing the center of the support a little to the right of the intersection of the center lines of the chords. Usually the corbel will be sufficiently heavy to take care of this moment, which cannot be exactly determined.

67. Design of Joint U_2.—As the rafter is continuous by this joint it will be necessary to consider only the vertical rod and the inclined brace.

Since the stress of the rod is comparatively small, the standard size of cast-iron washer can be employed to transfer it to the rafter. Two forms of angle washers are shown

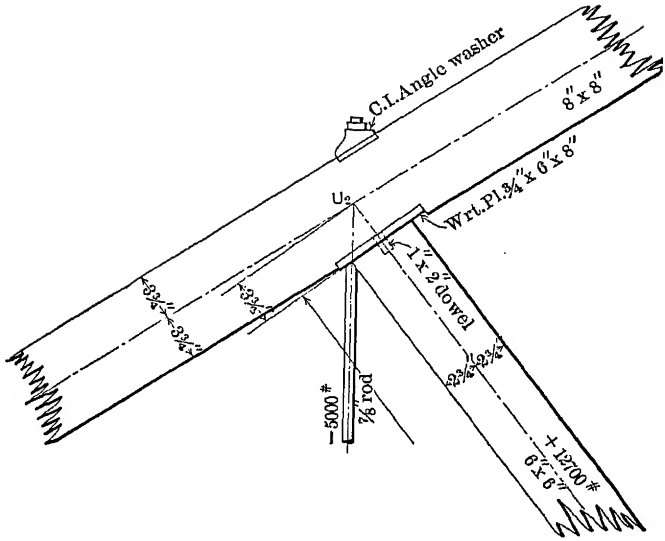
C.I. Angle washer
8" x 8"
Wrt. Pl. 3/4" x 6" x 8"
U0
1" x 2" dowel
3 3/4"
3 3/4"
3 3/4"
2 3/4"
2 3/4"
−5000#
7/8" rod
+12700#
6" x 6"

FIG. 38.

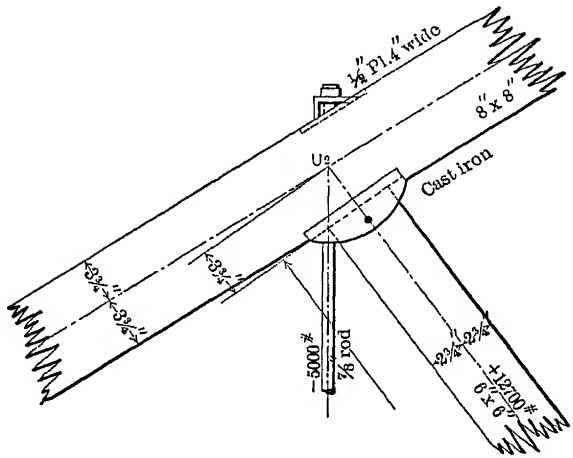
1/4" Pl. 4" wide
8" x 8"
U0
Cast iron
3 3/4"
3 3/4"
3 3/4"
2 3/4"
2 3/4"
−5000#
7/8" rod
+12700#
6" x 6"

FIG. 39.

in Figs. 38 and 40. In Figs. 39 a bent plate washer is shown which answers very well if let into the wood or made sufficiently heavy so that the stress in the rod cannot change the angles of the bends.

Where the inclined member is so nearly at right angles with the top chord as in this case, a square bearing, as shown in Fig. 40, is all that is required if there is sufficient

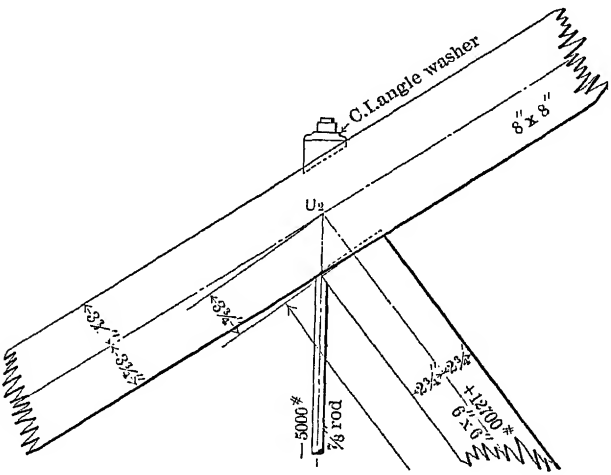

FIG. 40.

bearing area. In this case there are 30.25 □″, which has a safe bearing value of 30.25 × 350 = 10600 lbs., which is not sufficient.

Fig. 38 shows a method of increasing the bearing area by means of a wrought plate, and Fig. 39 the same end reached with a cast-iron block. In all cases the strut should be secured in place either by dowels, pins or other device.

68. Design of Joint U_1.—The disposition of the $\frac{3}{4}''$ rod is evident from the Figs. 41, 42, and 43:

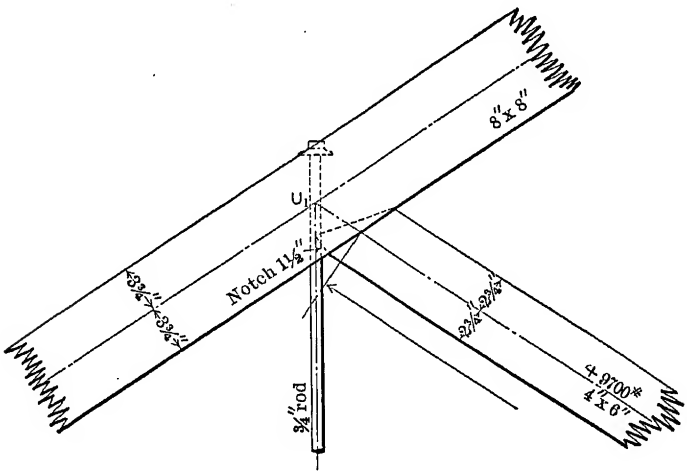

FIG. 41.

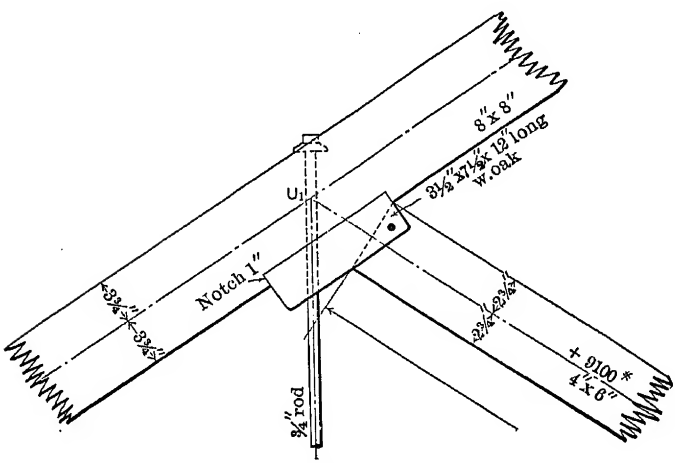

FIG. 42.

Fig. 41 shows the almost universal method employed by carpenters in framing inclined braces, only they seldom take care that the center lines of all pieces meet in a point as they should.

If the thrust 9100 lbs. be resolved into two components respectively normal to the dotted ends, it is found that a notch $1\frac{1}{2}''$ deep is entirely inadequate to take care of the component parallel to the rafter. The cut should be made vertical and $2\frac{5}{8}''$ deep. The com-

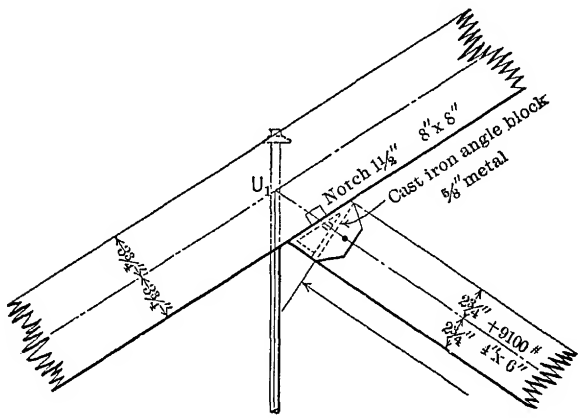

FIG. 43.

ponent nearly normal to the rafter is safely carried by about 22 □″.

Figs. 42 and 43 show the application of angle-blocks, which really make much better connections, though somewhat more expensive, than the detail first described.

69. Design of Joint L_2.—Fig. 44 shows the ordinary method of connecting the pieces at this joint. The

horizontal component of 9100 lbs. is taken by a notch $2\frac{5}{8}''$ deep and $3\frac{3}{4}''$ long.* The brace is fastened in

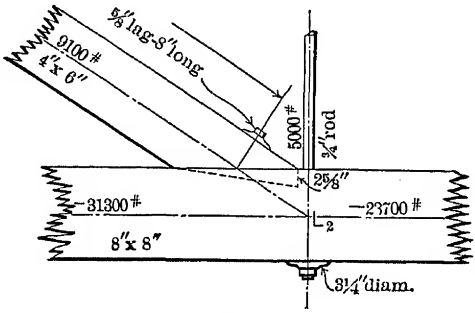

FIG. 44.

place by a $\frac{5}{8}''$ lag-screw 8″ long. The standard cast-iron washer, $3\frac{1}{4}''$ in diameter, gives sufficient bearing

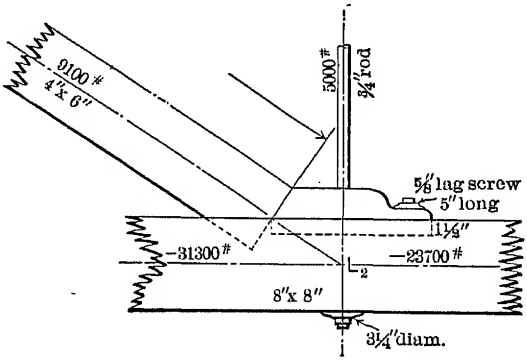

FIG. 45.

area against the bottom chord for the stress in the vertical rod.

Fig. 45 shows a wooden angle-block let into the bottom chord $1\frac{1}{2}''$. The dotted tenon on the brace need not be

* The permissible bearing against a vertical cut on the brace is 760 lbs. per square inch which requires a notch $2\frac{5}{8}\times3\frac{3}{4}$. If the cut bisects the angle between the brace and bottom chord the notch required is $2''\times3\frac{3}{4}''$.

over 2″ thick to hold the brace in position. The principal objection to the two details just described is that the end bearing against the brace is not central, but at one side, thereby lowering the safe load which the brace can carry.

Fig. 46 shows the application of a cast-iron angle-block. The brace is cut at the end so that an area $3\frac{3}{4}'' \times 4''$ trans-

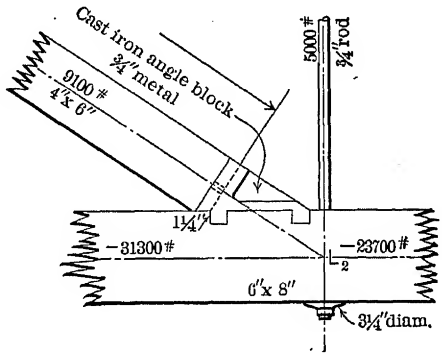

FIG. 46.

mits the stress to the angle-block. If the lugs on the bottom of the block are $1\frac{1}{4}''$ deep, the horizontal component of the stress in the brace will be safely transmitted.

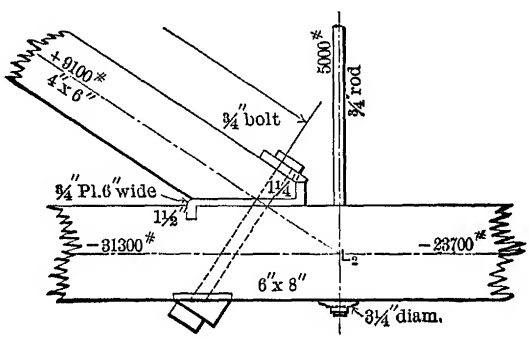

FIG. 47.

In Fig. 47 a $\frac{3}{4}''$ bent plate is employed. This detail requires a $\frac{3}{4}''$ bolt passing through the brace and the bottom

chord to make a solid connection. The use of the bolt makes the end of the brace practically fixed, so that the stress may be assumed to be transmitted along the axis or center line.

70. Design of Joint L_3 and Hook Splice.—A very common method of securing the two braces meeting at L_3 is shown in Fig. 48, though they are rarely dapped into the lower chord. This method does fairly well, excepting

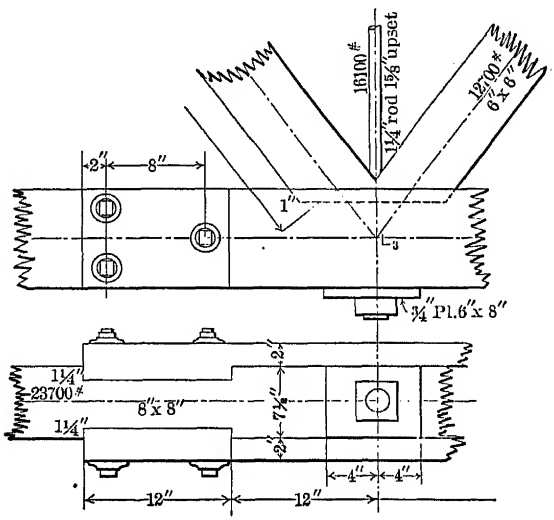

FIG. 48.

when the wind blows and one brace has a much larger stress than the other. In this case the stresses are not balanced, and the struts are held in place by friction and the stiffness of the top chord.

The washer for the $1\frac{1}{4}''$ rod upset to $1\frac{5}{8}''$ must have an area of $\frac{16100}{350} = 46\ \square''$, which is greater than the bearing area of the standard cast-iron washer, so a $\frac{3}{4}''$ plate, $6'' \times 8''$, will be used.

It is customary to splice the bottom chord at this joint when a splice is necessary. The net area required is $\frac{23700}{1200} =$ 20 □″. The splice shown in Fig. 48 is one commonly used in old trusses, and depends entirely upon the longitudinal shear of the wood and the end bearing of the fibers.

The total end bearing required is $\frac{23700}{1400} = 17$ □″, which is obtained by two notches, each $1\frac{1}{4}''$ deep as shown. The total shearing area required is $\frac{23700}{150} = 158$ □″. Deducting bolt-holes, the area used is $2(7\frac{1}{2} \times 12) - 2(3) = 174$ □″. The three bolts used simply hold the pieces in place and prevent the rotation of the hooks or tables.

Fig. 49 * shows a similar splice where metal keys are used. The end-bearing area of the wood is the same as

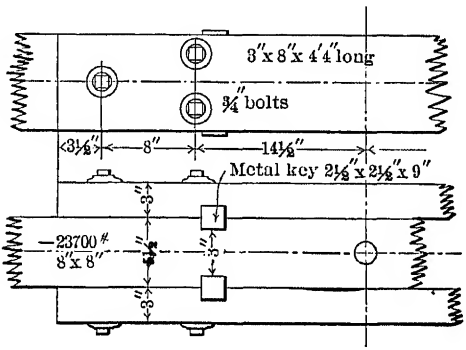

FIG. 49.

before, and the available area of the wood for longitudinal shear is sufficient, as shown by the dimensions given. The net area of the side pieces is $2(2 \times 7\frac{1}{2}) = 30$ □″, while but 20 □″ are actually required.

71. Design of Joint L_3 and Fish-plate Splice of Wood. —In this case the braces are held in position by dowels

* The bearing across the grain of the wood is excessive when square metal keys are used. This is due to the tendency of the keys to rotate.

and a wooden angle-block. The details of the vertical rod need no explanation, as they are the same as in Art. 70. The splice is made up of two fish-plates of wood each $2\frac{1}{4}'' \times 7\frac{1}{2}'' \times 46''$ long and four $1\frac{1}{2}''$ bolts. The net area of the fish-plates is $2(2\frac{1}{4} \times 7\frac{1}{2}) - 2(2 \times 1\frac{1}{2}) = 27.7\ \square''$, while but $20\ \square''$ are required.

Each bolt resists in bending $\frac{23700}{8}(1\frac{1}{8} + 1\frac{3}{8}) = 7400$

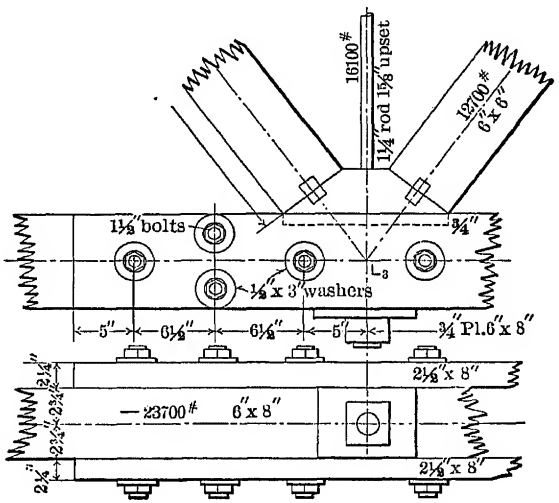

FIG. 50.

inch-pounds, which is less than the safe value, or 8280 inch-pounds (Art. 31)

The total end bearing of the wood fibers is $2(4 \times 2\frac{1}{4} \times 1\frac{1}{2}) = 27\ \square''$, and that required $\frac{23700}{850} = 28\ \square''$.

The longitudinal shearing area of the wood and the transverse shearing area of the bolts are evidently in excess of that required.

The nuts on the bolts may be considerably smaller than the standard size, as they merely keep the pieces in place. The cast-iron washer may be replaced by the small plate

washer, to make sure that no threeds are in the wood; otherwise washers are not needed. The bolts should have a driving fit.

72. Design of Joint L_3 and Fish-plate Splice of Metal.—This detail, differing slightly from those previously given, requires little additional explanation. A white-oak washer

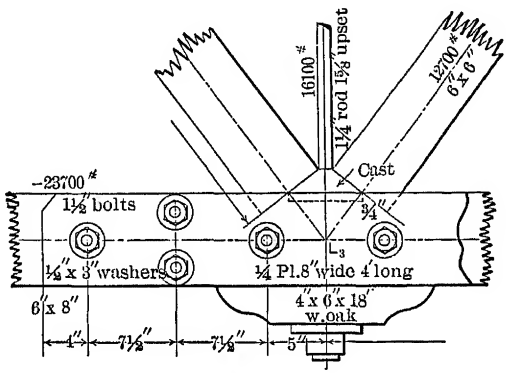

FIG. 51.

has been introduced so that a smaller washer can be used for the vertical rod.

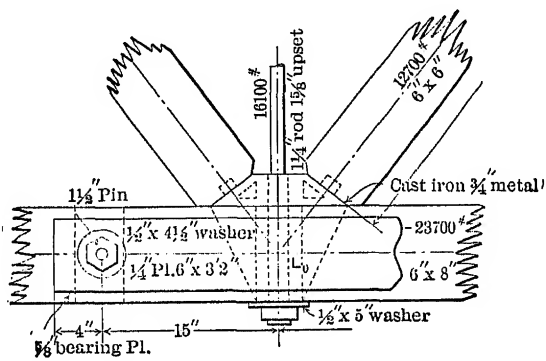

FIG. 52.

A small cast-iron angle block replaces the wooden block of the previous article. The splice is essentially the same,

with metal fish-plates. Contrary to the usual practice, plate washers have been used under the nuts. This is to make certain that the fish-plates bear against the bolt proper and not against threads. If recessed bridge-pin nuts are used, the washers can be omitted.

Fig. 52 shows another metal fish-plate splice where four bolts have been replaced by one pin $1\frac{1}{2}''$ in diameter.

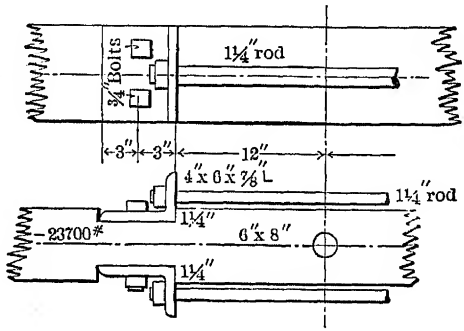

FIG. 53.

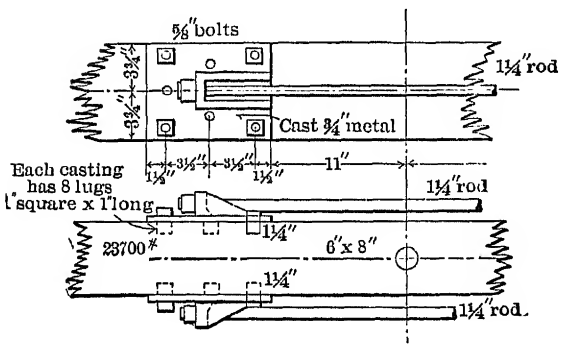

FIG. 54.

The bearing plate reduces the bending moment in the pin and increases the bearing against the wood. The struts bear against a cast-iron angle-block, with a "pipe"

for the vertical rod, which transmits its stress directly to the block. Two pins in the center of the block keep the bottom chord in position laterally.

73. Metal Splices: for Tension Members of Wood.—Figs. 53 and 54 show two types of metal splices which have the great advantage over all the splices described above in that they can be adjusted. The detail shown in Fig. 53 has one serious fault. The tension in the rods tends to

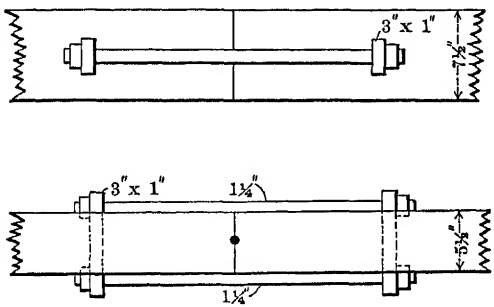

FIG. 54*a*.

rotate the angles and thereby produces excessive bearing stresses across the grain of the wood. The castings in Fig. 54 usually have round lugs, but square lugs are much more efficient.

A very old and excellent form of splice is shown in Fig. 54*a*.*

74. General Remarks Concerning Splices.—There are a large number of splices in common use which have not been considered, for the reason that most of them are faulty in design and usually very weak. In fact certain scarf-splices are almost useless, and without doubt the

* See Manual for Railroad Engineers, by George L. Vose, 1872.

truss is only prevented from failing by the stiffness of its supports.

75. Design of Joint U_3.—The design of this joint is clearly shown in Figs. 55–58. No further explanation seems necessary.

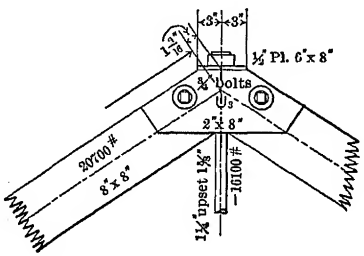

FIG. 55.

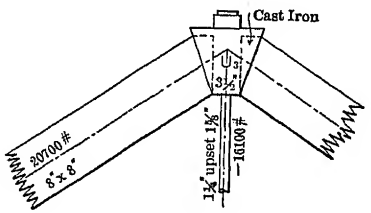

FIG. 57.

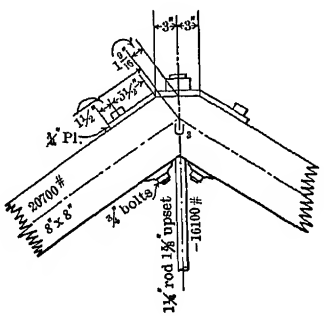

FIG. 56.

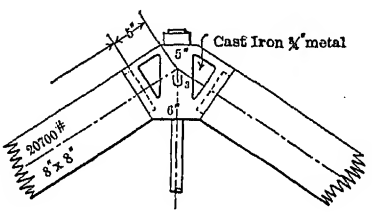

FIG. 58.

76. The Attachment of Purlins.—The details shown (Figs. 59–63) are self-explanatory. In all cases the adjacent purlins should be tied together by straps as shown. This precaution may save serious damage during erection, if at no other time.

The patent hangers shown in Figs. 64, 65, 66, and 67 can be employed to advantage when the purlins are placed between the top chords of the trusses.

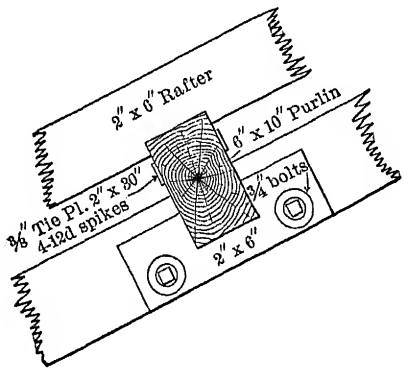

FIG. 59.

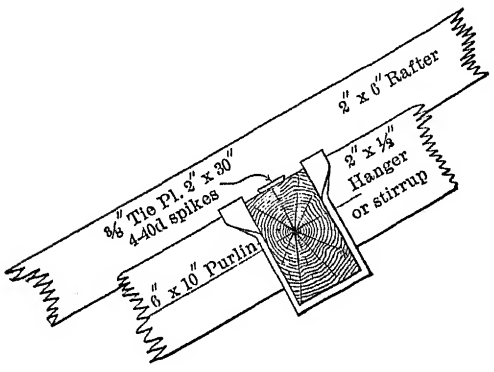

FIG. 60.

77. The Complete Design.*—Plate I shows a complete design for the roof-truss, with stress diagrams and bills of

* The dimensions and quantities shown on Plates I and II are based on timber which is full size. The purlins should be 10″ × 10″ instead of 6″ × 10″.

material. The weight is about 100 lbs. less than that assumed. In dimensioning the drawing a sufficient

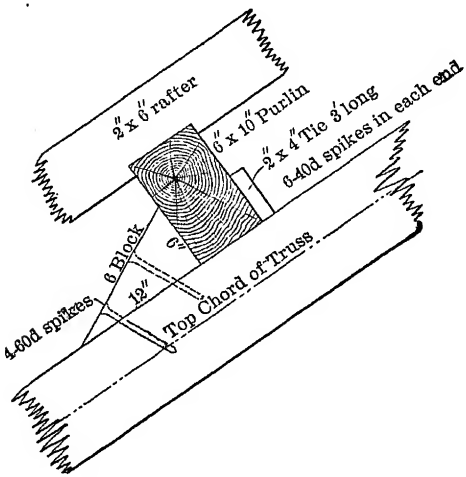

FIG. 61.

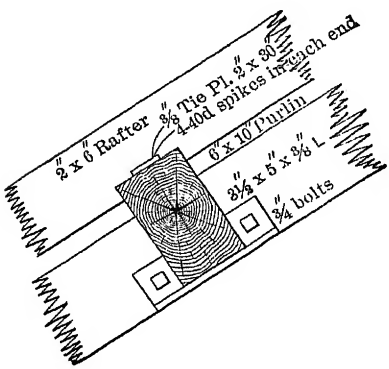

FIG. 62,

number of dimensions should be given to enable the carpenter to lay off every piece, notch, bolt hole, etc., without scaling from the drawing. To provide for settlement or sagging due to shrinkage and the seating of the

various pieces when the loading comes upon the new truss, the top chord is made sowewhat longer than its computed length. From $\frac{1}{2}''$ to $\frac{3}{4}''$ for each 10′ in length will be sufficient in most cases. A truss so constructed is said to be cambered.

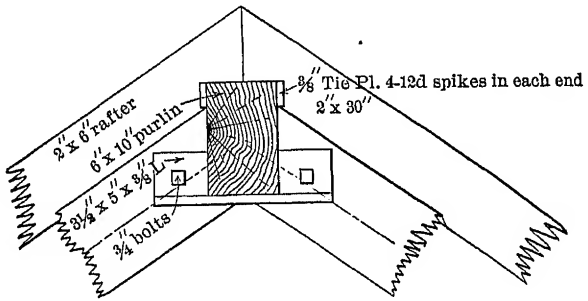

FIG. 63.

FIG. 64.

FIG. 65.

FIG. 66.

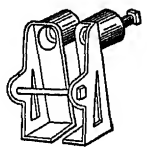

FIG. 67.

In computing the weights of the steel rods they have been assumed to be of uniform diameter from end to end, and increased in length an amount sufficient to provide metal for the upsets. See Table VII.

The lengths of small bolts with heads should be given from under the head to the end of the bolt, and the only fraction of an inch used should be $\frac{1}{2}$.

Plate II shows another arrangement of the web bracing which has some advantages. The compression members are shorter, and consequently can be made lighter. The bottom chord at the centre has a much smaller stress,

permitting the use of a cheap splice. On account of the increase of metal the truss is not quite as economical as that shown on Plate I. For very heavy trusses of moderate span the second design with the dotted diagonal is to be preferred.

CHAPTER VI.

DESIGN OF A STEEL ROOF-TRUSS.

78. Data.—Let the loading and arrangement of the various parts of the roof be the same as in Chapter V, and simply replace the wooden truss by a steel truss of the shape shown on Plate III. Since there is but little difference between the weights of wooden and steel trusses of the same strength, the stresses may be taken as found in Chapter V and given on Plate III.

79. Allowable Stresses per Square Inch.

SOFT STEEL.

Tension with the grain.....	Art. 35,	16000 lbs.
Bearing for rivets and bolts.....	Art. 24,	20000 lbs.
Transverse stress—extreme fiber stress.	Art. 30,	16000 lbs.
Shearing across the grain.....	Art. 32,	10000 lbs.
Extreme fiber stress in bending (pins)..	Art. 31,	25000 lbs.

For compression use table, page 28, with a factor of safety of 4. Compare with safe values on p. 173.

80. Sizes of Compression Members.

Piece L_0U_1. Stress $= +34500$ lbs.

The ordinary shape of the cross-section of compression members in steel is shown on Plate III. Two angles are placed back to back and separated by $\frac{1}{4}''$ or $\frac{3}{8}''$ to admit gusset-plates, by means of which all members are connected

at the apexes. Generally it is more economical to employ unequal leg angles with the longer legs back to back.

Let the gusset-plates be assumed $\frac{3}{8}''$ thick, then from Table XIII the least radii of gyration of angles placed as explained above can be taken.

Try two $3\frac{1}{2}'' \times 2\frac{1}{2}'' \times \frac{1}{4}''$ angles. From Table XIII the least radius of gyration (r) is 1.09. The unsupported length of the piece L_0U_1 in *feet* is 12, and hence $\frac{L}{r} = \frac{12}{1.09} = 11.0$. From Art. 22, $P = 30324$ lbs. for square-ended columns when $\frac{L}{r} = 11.0$. $30324 \div 4 = 7581$ lbs. = the allowable stress per square inch. $\frac{34500}{7581} = 4.55$ = number of square inches required. The two angles assumed have a total area of 2.88 square inches, hence another trial must be made. An inspection of Table XIII shows that 1.09 is also the least radius of gyration for a pair of $3\frac{1}{2}'' \times 2\frac{1}{2}'' \times \frac{1}{2}''$ angles placed $\frac{3}{8}''$ apart, as shown; hence if any pair of $3\frac{1}{2}'' \times 2\frac{1}{2}''$ angles up to this size gives sufficient area, the pair will safely carry the load.

Two $3\frac{1}{2}'' \times 2\frac{1}{2}'' \times \frac{7}{16}''$ angles have an area of $2 \times 2.43 = 4.86$ square inches.

Angles with $2\frac{1}{2}''$ legs do not have as much bearing for purlins as those with longer legs, and sometimes are not as economical. In this case, two $4'' \times 3'' \times \frac{5}{16}''$ angles having an area of 4.18 square inches will safely carry 34500 lbs., making a better and more economical combination than that tried above. This combination will be used.

Thus far it has been assumed that the two angles act as one piece. Evidently this cannot be the case unless they are firmly connected. The least radius of gyration of a single angle is about a diagonal axis as shown in

Table XII, and for a $4'' \times 3'' \times \frac{5}{16}''$ angle its value is 0.65. If the unsupported length of a single angle is l, then in order that the single angle shall have the same strength as the combination above, $\frac{l}{0.65}$ must equal $\frac{L}{1.27} = 9.4$, or $l = 6'.1$. Practice makes this length not more than $\frac{2}{3}(6.1)$, or about 4 feet. Hence the angles will be rigidly connected by rivets every 4 feet.

Pieces U_1U_2 and U_2U_3.

Owing to the slight differences in the stresses of the top chords the entire chord is composed of the same combination, or two $4'' \times 3'' \times \frac{5}{16}''$ angles, having an area of 4.18 square inches.

Piece U_2L_2. Stress $= +10100$.

Although it is common practice to employ but one angle where the web stress is small, yet it is better practice to use two in order that the stress may not be transmitted to one side of the gusset-plate.

The unsupported length of this piece is $13'.3$. The least radius of gyration of two $2\frac{1}{2}'' \times 2'' \times \frac{1}{4}''$ angles is 0.94. $\frac{L}{r} = \frac{13.3}{0.78} = 17.0$, and, from Art. 22, $P =$ about 20900. $\frac{20900}{4} = 5225 =$ the allowable stress per square inch. $\frac{10100}{5225} = 1.93$ square inches required.

Two $2\frac{1}{2}'' \times 2'' \times \frac{1}{4}''$ angles have an area of 2.12 square inches, and hence are safe according to the strut formula. *For stiffness no compression member should have a dimension less than $\frac{1}{60}$ of its length.*

$\frac{13.3 \times 12}{50} = 3''.2$, or the long legs of the angles should

be $3''.2$, and the sum of the short legs not less than this amount. Hence two $3\frac{1}{2}'' \times 2\frac{1}{2}'' \times \frac{1}{4}''$ angles, having an area of 2.88 square inches, must be used. Tie-rivets will be used once in about every four feet.

Piece L_1U_1 will be the same as L_2U_2.

$$\text{Piece } U_1L_2. \quad \text{Stress} = +9100 \text{ lbs.}$$

Two $3'' \times 2\frac{1}{2}'' \times \frac{1}{4}''$ angles $= 2.62$ square inches can evidently be used, as the dimensions and stresses are slightly less than for U_2L_2.

The least radius of gyration of a single $3'' \times 2\frac{1}{2}'' \times \frac{1}{4}''$ angle is 0.53, hence they must be riveted together every $\frac{2}{3}(0.53)(12.0) = 4.24$ feet. Note that $2\frac{1}{2}''$ legs can be used here, as they will receive no rivets, while in the top chord both angle legs will receive rivets as shown on Plate III.

81. Sizes of Tension Members.

$$\text{Piece } L_0L_2. \quad \text{Stress} = -31300 \text{ lbs.}$$

The net area required is $\frac{31300}{16000} = 1.96$ square inches. The same general form of section is used for tension members as for compression members. In the compression members the rivets were assumed to fill the holes and transmit the stresses from one side of the holes to the other. In tension members this assumption cannot be made, for the fibers are cut off by the rivet-hole, and consequently cannot transmit any tensile stress across the rivet-holes. This being the case, the two angles employed for tension members must have an area over and above the net area required equal to the area cut out or injured by the rivet-holes. In calculating the reduction of area for rivet-holes, they are assumed to be $\frac{1}{8}''$ larger than the diameter

of the rivet. For a $\frac{3}{4}''$ rivet the diameter of the hole is taken as $\frac{7}{8}''$. See Table IV.

For this truss let all rivets be $\frac{3}{4}''$. For a trial let the piece in hand (L_0L_2) be made up of two $3'' \times 2\frac{1}{2}'' \times \frac{1}{4}''$ angles having an area of 2.62 square inches. As shown by the arrangement of rivets on Plate III, but one rivet-hole in one leg of each angle must be deducted in getting the net area. One $\frac{3}{4}''$ rivet-hole reduces the area of two angles $2(\frac{7}{8} \times \frac{1}{4}) =$ 0.44 square inch, and hence the net area of two $3'' \times 2\frac{1}{2}'' \times \frac{1}{4}''$ angles is $2.62 - 0.44 = 2.18$ square inches, which is a little greater than that required, and consequently can be safely used.

Piece L_2U_3. Stress $= -17000$ lbs.

$\frac{17000}{16000} = 1.06$ square inches net section required.

Two $2\frac{1}{2}'' \times 2'' \times \frac{1}{4}''$ angles $= 2.12$ square inches.

$2.12 - 0.44 = 1.68$ square inches net section. As this is greater than the area required, and also the smallest standard angle with $\frac{1}{4}''$ metal which can be conveniently used with $\frac{3}{4}''$ rivets, it will be employed.

Piece L_3U_3. Stress $= -16{,}300$ lbs.

Use two $2\frac{1}{2}'' \times 2'' \times \frac{1}{4}''$ angles having a gross area of 2.12 square inches and a net area of 1.68 square inches.

82. Design of Joint L_0, Plate III.—The piece L_0U_1 must transfer a stress of 34500 lbs. to the gusset through a number of $\frac{3}{4}''$ rivets. These rivets may fail in two ways. They may shear off or crush. If they shear off, two surfaces must be sheared, and hence they are said to be in double shear. From Art. 32, a $\frac{3}{4}''$ rivet in double shear will safely carry 8836, and hence in this case $\frac{34500}{8836} = 4$ is the number of rivets required.

The smallest bearing against the rivets is the $\frac{3}{8}''$ gusset-plate. From Art. 24, the safe bearing value in a $\frac{3}{8}''$ plate is 5625 lbs., showing that seven rivets must be employed to make the connection safe in bearing.

It is seen that as long as the angles are at least $\frac{1}{4}''$ thick, the gussets $\frac{3}{8}''$ thick, and the rivets $\frac{3}{4}''$ in diameter the required number of rivets in any member equals the stress divided by the bearing value of a $\frac{3}{4}''$ rivet in a $\frac{3}{8}''$ plate, or 5625.

The piece L_0L_2 requires $\frac{31300}{5625} = 6$ rivets.

The rivets are assumed to be free from bending, as the rivet-heads clamp the pieces together firmly.

The location of the rivet lines depends almost entirely upon practical considerations. The customary locations are given in Table III.

83. Design of Joint U_1.—The number of rivets required in L_2U_1 is $\frac{9100}{5625} = 2$ rivets. The best practice uses at least *three* rivets, but the use of *two* is common. As the top chord is continuous, evidently the same number is required in it.

Joint U_2 will require the same treatment.

84. Design of Joint L_2.

L_0L_2 requires 6 rivets as in Art. 82.
L_2U_1 requires 2 rivets as in Art. 83.
L_2U_2 requires 2 rivets as in Art. 83.
L_2U_3 requires $\frac{17000}{5625} = 4$ rivets.
L_2L_2' requires $\frac{16300}{5625} = 3$ rivets,

but the connection of L_2L_2' will probably be made in the field, that is, will not be made in the shop but at the building, so the number of rivets should be increased 25 per cent. Therefore 4 rivets will be provided for.

85. Design of Joint U_3.

U_2U_3 requires 7 rivets as in Art. 82.
L_2U_3 requires 4 rivets as in Art. 83.

If field-rivets are used, these numbers become 9 and 5 respectively.

86. Splices.—As shown on Plate III the bottom chord angles have been connected to the gusset-plate at joint L_2 in the manner followed at the other joints with the addition of a plate connecting the horizontal legs of the angles. Although this connection is almost universally used, yet it is much better practice to extend L_1L_2 beyond the gusset-plate and then splice the angles by means of a plate between the vertical legs of the angles and a horizontal plate on the under side of the horizontal legs of the angles. See paragraph 38, page 168.

87. End Supports.—In designing joint L_0 only enough rivets were placed in the bottom chord to transmit its stress to the gusset-plate. Usually a plate not less than $\frac{1}{2}''$ thick is riveted under the bottom-chord angles to act as a bearing plate upon the support. The entire reaction must pass through this plate and be transmitted to the gusset-plate by means of the bottom-chord angles, unless the gusset has a good bearing upon the plate. This is not the usual condition and is not economical. The reaction is about 24000 lbs. (Art. 65). $\frac{24000}{5025} = 5 =$ the number of $\frac{3}{4}''$ rivets required for this purpose alone. The total number of rivets in the bottom angles is $5 + 6 = 11$ rivets. The number of rivets found by this method is in excess of the number theoretically required. The exact number is governed by the resultant of the reaction and the stress in L_0L_1.

The bearing plate should be large enough to distribute the load over the material upon which it bears, and to admit two anchor-bolts outside the horizontal legs of the bottom angles.

88. **Expansion.**—Expansion of trusses having spans less than 75 feet may be provided for by letting the bearing plate slide upon a similar plate anchored to the supports, the anchor-bolts extending through the upper plates in slotted holes. See Plate III.

Trusses having spans greater than 75 feet should be provided with rollers at one end.

In steel buildings the trusses are usually riveted to the tops of columns and no special provision made for expansion.

89. **Frame Lines and Rivet Lines.**—Strictly, the rivet lines and the frame lines used in determining the stresses should coincide with the line connecting the centers of gravity of the cross-sections of the members. This is not practicable, so the rivet lines and frame lines are made to coincide.

90. **Drawings.**—Plate III has been designed to show various details and methods of connecting the several parts of the truss and the roof members. A great many other forms of connections, purlins, roof coverings, etc., are in use, but all can be designed by the methods given above. Plate III contains all data necessary for the making of an estimate of cost, and is quite complete enough for the contractor to make dimensioned *shop drawings* from. These drawings are best made by the parties who build the truss, as their draughtsmen are familiar with the machinery and templets which will be used.

91. Connections for Angles.—In designing the connections of the angles, but one leg of the angle has been riveted to the gusset-plate. From a series of experiments made by Prof. F. P. McKibben (*Engineering News*, July 5, 1906, and August 22, 1907) it appears that this connection has an efficiency of about 76 per cent based upon the net area of the angle. If short lug or hitch angles are used to connect the outstanding leg to the gusset-plate the efficiency is raised but about 10 per cent. The use of lug angles is not economical unless considerable saving can be made in the size of the gusset-plate. While the ordinary connection has an efficiency of but 76 per cent yet members and connections designed by this method are perfectly safe for structures of the class being considered, since the stress per square inch is less than 22000 pounds. The above statements have particular reference to members in tension but are probably true for compression members as well, as far as efficiency is concerned.

92. Purlins.—When I beams or channels are used for purlins their design offers no difficulties. The loads are resolved respectively into components parallel and normal to the webs of the purlins and then the method explained in Art. 30 will determine the extreme fiber stress for the section assumed. If this exceeds or differs greatly from the allowable fiber stress, a new trial must be made.

Although Art. 30 explains the method to be followed in designing purlins consisting of angles, and an example given to illustrate the method, yet it may be well to give a second example here where the loading is in two planes.

From Art. 50. The moments at the center of the purlin are given for components of the loads respectively

normal and parallel to the rafter. Let these two moments be resisted by a $6'' \times 4'' \times \frac{13}{16}''$ angle placed as shown in Fig. 68. Table XII gives the location of the axes 1–1,

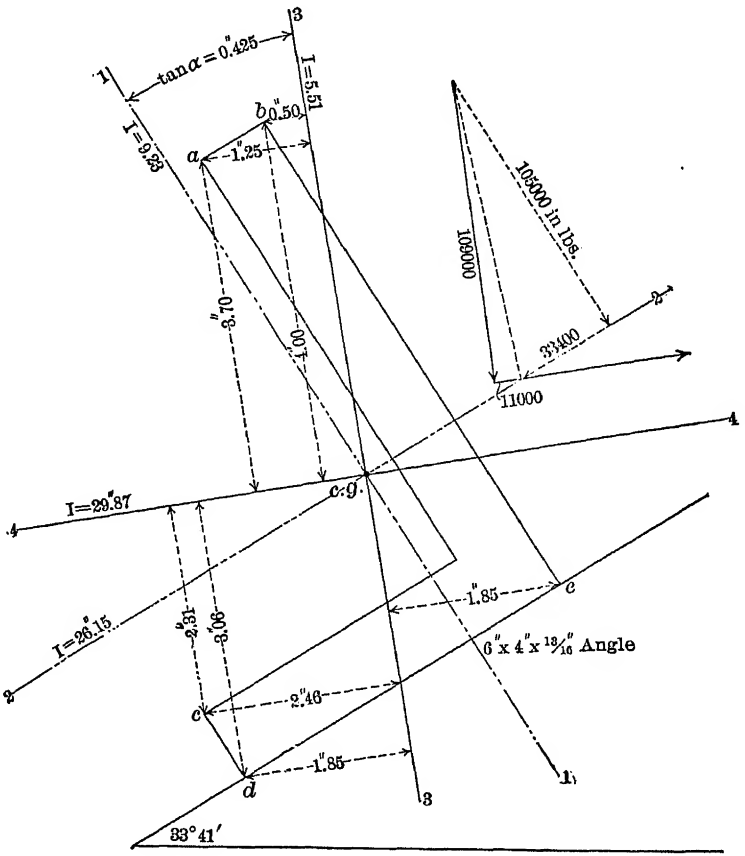

FIG. 68.

2–2, 3–3, and 4–4, the axes 3–3 and 4–4 being the principal axes. Since the sum of the moments of inertia about any pair of rectangular axes is constant, $I_{1-1} + I_{2-2} = I_{3-3} + I_{4-4}$. I_{1-1} and I_{2-2} are given in Table XII,

$I_{3-3} = Ar^2$, where A and r can be found from the table. Then $I_{4-4} = I_{1-1} + I_{2-2} - I_{3-3} = 35.38 - 5.51 = 29.87$. From a scale drawing or by computation the distances from the principal axes to the points a, b, c, etc., are readily found. The two moments are resolved into components parallel to the principal axes, shown in Fig. 68. The resultant moment parallel to the axis 3–3 is 109000 in.-lbs. and that parallel to 4–4 is 11000 in.-lbs. These moments produce compression at a and b, tension at e, and tension and compression at c and d. Inspection indicates that the maximum fiber stress will be at a or b.

For the point a,

$$f_4 = \frac{109000}{29.87} 3.70 = 13500,$$

$$f_3 = \frac{17000}{5.51} 1.25 = 2500,$$

hence

$$f_4 + f_3 = 13500 + 2500 = 16000 \text{ lbs.},$$

which is the fiber stress at a. The fiber stress at b is 15600 lbs. The permissible fiber stress is 16000 lbs., hence the next heavier angle must be used unless the weight of the purlin is neglected.

Since the moments of inertia of the angles given in Table XII are based upon angles without fillets and rounded corners, the points a and b have been taken as shown in Fig. 68. The distances to the axes shown are values scaled from a full size drawing and are sufficiently accurate for all practical purposes.

As stated in Art. 50, the planes of the loads are assumed to pass through the longitudinal gravity line of the angle.

As the rafters are usually placed on top of the purlin, there is a twisting moment which has not been considered.

93. End Cuts of Angles, Shape of Gusset-plates—Dimensions, etc.—In general, it is economical to cut all angles at right angles to their length. Gusset-plates should have as few cuts as possible and in no case, where avoidable, should re-entrant cuts be made. Any framework which can be included in a rectangle having one side not exceeding 10 feet can be shipped by rail. This permits the riveting up of small trusses in the shop, thereby avoiding field riveting. Large trusses can be separated into parts which can be shipped, leaving but a few joints to be made in the field.

TABLES.

TABLE I.

WEIGHTS OF VARIOUS SUBSTANCES.

WOODS (SEASONED).

Name.	Weight in Lbs. per Cu. Foot.	Weight in Lbs. per Square Foot, Board Measure.
Ash, American, white	38	3.17
Cherry	42	3.50
Chestnut	41	3.42
Elm	35	2.96
Hemlock	25	2.08
Hickory	53	4.42
Mahogany, Spanish	53	4.42
" Honduras	35	2.96
Maple	49	4.08
Oak, live	59	4.92
" white	52	4.33
Pine, white	25	2.08
" yellow, northern	34	2.83
" " southern	45	3.75
Spruce	25	2.08
Sycamore	37	3.08
Walnut, black	38	3.17

Green timbers usually weigh from one-fifth to one-half more than dry.

MASONRY.

Name.	Weight in Lbs. per Cubic Foot.
Brick-work, pressed brick	140
" ordinary	112
Granite or limestone, well dressed	165
" " mortar rubble	154
" " dry	138
Sandstone, well dressed	144
	109

BRICK AND STONE.

Name.	Weight in Lbs. per Cubic Foot.
Brick, best pressed	150
" common, hard	125
" soft, inferior	100
Cement, hydraulic loose, Rosendale	56
" " " Louisville	50
" " " English Portland	90
Granite	170
Limestones and marbles	168
" " " in small pieces	96
Quartz, common	165
Sandstones, building	151
Shales, red or black	162
Slate	175

METALS.

Name.	Weight in Lbs. per Cubic Ft.	Weight in Lbs. per Square Ft., 1″ thick
Brass (copper and zinc), cast	504	42.00
" rolled	524	43.66
Copper, cast	542	45.17
" rolled	548	45.66
Iron, cast	450	37.50
" wrought, purest	485	40.42
" " average	480	40.00
Lead	711	59.27
Steel	490	40.83
Tin, cast	459	38.23
Zinc	437	36.42

TABLE II.

WEIGHTS OF ROOF COVERINGS.

CORRUGATED IRON (BLACK).

Weight of *corrugated iron* required for one square of roof, allowing six inches lap in length and two and one-half inches in width of sheet.

(*Keystone.*)

Thickness in Inches.	Weight in Lbs. per Sq. Ft., flat.	Weight in Lbs. per Sq. Ft., corrugated.	Weight in Pounds of One Square of the following Lengths.					
			5′	6′	7′	8′	9′	10′
0.065	2.61	3.28	365	358	353	350	348	346
0.049	1.97	2.48	275	270	267	264	262	261
0.035	1.40	1.76	196	192	190	188	186	185
0.028	1.12	1.41	156	154	152	150	149	148
0.022	0.88	1.11	123	121	119	118	117	117
0.018	0.72	0.91	101	99	97	97	96	95

The above table is calculated for sheets 30¼ inches wide before corrugating.
Purlins should not be placed over 6′ apart.

(*Phœnix.*)

Thickness in Inches.	BLACK IRON.			GALVANIZED IRON.		
	Weight in Pounds per Square Foot, flat.	Weight in Pounds per Square Foot, on Roof.	Weight in Pounds per Square Foot, on Roof.	Weight in Pounds per Square Foot, flat.	Weight in Pounds per Square Foot, on Roof.	Weight in Pounds per Square Foot, on Roof.
0.065	2.61	3.03	3.37	3.00	3.50	3.88
0.049	1.97	2.29	2.54	2.37	2.76	3.07
0.035	1.40	1.63	1.82	1.75	2.03	2.26
0.028	1.12	1.31	1.45	1.31	1.53	1.71
0.022	0.88	1.03	1.14	1.06	1.24	1.37
0.018	0.72	0.84	0.93	0.94	1.09	1.21
	Flat.		Corrugated.		Flat.	Corrugated.

The above table is calculated for the ordinary size of sheet, which is from 2 to 2½ feet wide and from 6 to 8 feet long, allowing 4 inches lap in length and 2½ inches in width of sheet.
The galvanizing of sheet iron adds about one-third of a pound to its weight per square foot.

Table II—*Continued.*

PINE SHINGLES.

The number and weight of pine shingles required to cover one square of roof.

Number of Inches exposed to Weather.	Number of Shingles per Square of Roof.	Weight in Pounds of Shingles on one Square of Roofs.	Remarks.
4	900	216	The number of shingles per square is for common gable-roofs. For hip-roofs add five per cent. to these figures. The weights per square are based on the number per square.
4½	800	192	
5	720	173	
5½	655	157	
6	600	144	

SKYLIGHT GLASS.

The weights of various sizes and thicknesses of fluted or rough plate-glass required for one square of roof.

Dimensions in Inches.	Thickness in Inches.	Area in Square Feet.	Weight in Pounds per Square of Roof.
12×48	$\frac{3}{16}$	3.997	250
15×60	$\frac{1}{4}$	6.246	350
20×100	$\frac{3}{8}$	13.880	500
94×156	$\frac{1}{2}$	101.768	700

In the above table no allowance is made for lap.

If ordinary window-glass is used, single-thick glass (about $\frac{1}{16}''$) will weigh about 82 pounds per square, and double-thick glass (about $\frac{1}{8}''$) will weigh about 164 pounds per square, *no allowance being made for lap.*

TABLE II—*Continued.*

SLATE.

The number and superficial area of slate required for one square of roof.

Dimensions in Inches.	Number per Square.	Superficial Area in Square Feet.	Dimensions in Inches.	Number per Square.	Superficial Area in Square Feet.
6×12	533	267	12×18	160	240
7×12	457	.....	10×20	169	235
8×12	400	.....	11×20	154	
9×12	355	.....	12×20	141	
7×14	374	254	14×20	121	
8×14	327	.....	16×20	137	
9×14	291	.....	12×22	126	231
10×14	261	.....	14×22	108	
8×16	277	246	12×24	114	228
9×16	246	.....	14×24	98	
10×16	221	.....	16×24	86	
9×18	213	240	14×26	89	225
10×18	192	.....	16×26	78	

As slate is usually laid, the number of square feet of roof covered by one slate can be obtained from the following formula:

$$\frac{\text{Width} \times (\text{length} - 3 \text{ inches})}{288} = \text{the number of square feet of roof covered.}$$

The weight of slate of various lengths and thicknesses required for one square of roof.

Length in Inches.	Weight in pounds, per square, for the thickness.							
	$\frac{1}{8}''$	$\frac{3}{16}''$	$\frac{1}{4}''$	$\frac{3}{8}''$	$\frac{1}{2}''$	$\frac{5}{8}''$	$\frac{3}{4}''$	$1''$
12	483	724	967	1450	1936	2419	2902	3872
14	460	688	920	1379	1842	2301	2760	3683
16	445	667	890	1336	1784	2229	2670	3567
18	434	650	869	1303	1740	2174	2607	3480
20	425	637	851	1276	1704	2129	2553	3408
22	418	626	836	1254	1675	2093	2508	3350
24	412	617	825	1238	1653	2066	2478	3306
26	407	610	815	1222	1631	2039	2445	3263

The weights given above are based on the number of slate required for one square of roof, taking the weight of a cubic foot of slate at 175 pounds.

THE HUNT LIBRARY
CARNEGIE INSTITUTE OF TECHNOLOGY

TABLE II—*Continued.*

Terra-cotta.

Porous terra-cotta roofing 3″ thick weighs 16 pounds per square foot and 2″ thick, 12 pounds per square foot.

Ceiling made of the same material 2″ thick weighs 11 pounds per square foot.

Tiles.

Flat tiles $6\frac{1}{4}'' \times 10\frac{1}{2}'' \times \frac{5}{8}''$ weigh from 1480 to 1850 pounds per square of roof, the lap being one-half the length of the tile.

Tiles with grooves and fillets weigh from 740 to 925 pounds per square of roof.

Pan-tiles $14\frac{1}{2}'' \times 10\frac{1}{2}''$ laid 10″ to the weather weigh 850 pounds per square of roof.

Tin.

The usual sizes for roofing tin are 14″×20″ and 20″×28″. Without allowing anything for lap or waste, tin roofing weighs from 50 to 62 pounds per square.

Tin on the roof weighs from 62 to 75 pounds per square.

For preliminary estimates the weights of various roof coverings may be taken as tabulated below:

Name.	Weight in Lbs. per Square of Roof.
Cast-iron plates ($\frac{3}{8}''$ thick)	1500
Copper	80 –125
Felt and asphalt	100
Felt and gravel	800–1000
Iron, corrugated	100– 375
Iron, galvanized flat	100– 350
Lath and plaster	900–1000
Sheathing, pine 1″ thick yellow, northern	300
" " " " southern	400
Spruce 1″ thick	200
Sheathing, chestnut or maple, 1″ thick	400
" ash, hickory or oak, 1″ thick	500
Sheet iron ($\frac{1}{16}''$ thick)	300
" " " and laths	500
Shingles, pine	200
Slates ($\frac{1}{4}''$ thick)	900
Skylights (glass $\frac{3}{16}''$ to $\frac{1}{2}''$ thick)	250– 700
Sheet lead	500– 800
Thatch	650
Tin	70– 125
Tiles, flat	1500–2000
" (grooves and fillets)	700–1000
" pan	1000
" with mortar	2000–3000
Zinc	100– 200

Table III.

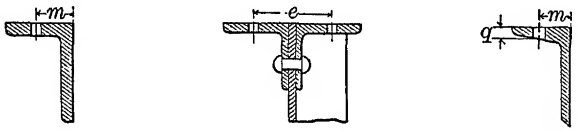

STANDARD SPACING OF RIVET AND BOLT HOLES IN ANGLES AND IN FLANGES AND CONNECTION ANGLES OF CHANNELS.

Angles.		Standard Channels.									
Depth of Leg, Inches.	*m* in Inches	Depth of Channel, Inches	Weight per Foot, Pounds.	*m* in Inches	*e* in Inches	*q* in Inche	Depth of Channel, Inches	Weight per Foot, Pounds	*m* in Inches	*e* in Inches	*q* in Inches
$\frac{3}{4}$	$\frac{7}{16}$	3	4.0	$\frac{15}{16}$	$4\frac{3}{16}$	$\frac{1}{4}$	8	18.75	$1\frac{1}{2}$	$4\frac{1}{32}$	$\frac{13}{32}$
		3	5.0	"	$4\frac{9}{32}$	$\frac{1}{4}$	8	21.25	$1\frac{1}{2}$	$4\frac{19}{32}$	$\frac{13}{32}$
1	$\frac{9}{16}$	3	6.0	"	$4\frac{3}{8}$	$\frac{9}{32}$					
$1\frac{1}{4}$	$\frac{11}{16}$						9	13.25	$1\frac{3}{8}$	$4\frac{1}{4}$	$\frac{13}{32}$
$1\frac{5}{16}$	$\frac{3}{4}$	4	5.25	1	$4\frac{3}{16}$	$\frac{9}{32}$	9	15.00	$1\frac{3}{8}$	$4\frac{5}{16}$	$\frac{13}{32}$
$1\frac{3}{8}$	$\frac{3}{4}$	4	6.25	1	$4\frac{9}{32}$	$\frac{9}{32}$	9	20.00	$1\frac{3}{4}$	$4\frac{15}{32}$	$\frac{3}{4}$
$1\frac{1}{2}$	$\frac{13}{16}$	4	7.25	1	$4\frac{11}{32}$	$\frac{5}{16}$	9	25.00	$1\frac{3}{4}$	$4\frac{5}{8}$	$\frac{13}{32}$
$1\frac{3}{4}$	$\frac{15}{16}$										
		5	6.5	1	$4\frac{7}{32}$	$\frac{5}{16}$	10	15.0	$1\frac{1}{2}$	$4\frac{1}{4}$	$\frac{7}{16}$
2	$1\frac{1}{8}$	5	9.0	$1\frac{1}{4}$	$4\frac{11}{32}$	$\frac{9}{32}$	10	20.0	$1\frac{1}{2}$	$4\frac{13}{32}$	$\frac{7}{16}$
$2\frac{1}{4}$	$1\frac{1}{4}$	5	11.5	$1\frac{1}{4}$	$4\frac{1}{2}$	$\frac{5}{16}$	10	25.0	2	$4\frac{17}{32}$	$\frac{3}{8}$
$2\frac{5}{16}$	$1\frac{1}{4}$						10	30.0	2	$4\frac{11}{16}$	$\frac{13}{32}$
$2\frac{1}{2}$	$1\frac{3}{8}$	6	8.0	$1\frac{1}{8}$	$4\frac{7}{32}$	$\frac{11}{32}$	10	35.0	2	$4\frac{27}{32}$	$\frac{7}{16}$
$2\frac{3}{4}$	1	6	10.5	$1\frac{1}{8}$	$4\frac{11}{32}$	$\frac{11}{32}$					
		6	13.0	$1\frac{3}{8}$	$4\frac{15}{32}$	$\frac{11}{32}$	12	20.5	$1\frac{3}{4}$	$4\frac{13}{16}$	$\frac{15}{32}$
3	$1\frac{3}{4}$	6	15.5	$1\frac{3}{8}$	$4\frac{9}{16}$	$\frac{11}{32}$	12	25.0	$1\frac{3}{4}$	$4\frac{39}{32}$	$\frac{1}{2}$
$3\frac{1}{2}$	2						12	30.0	2	$5\frac{1}{32}$	$\frac{15}{32}$
		7	9.75	$1\frac{1}{4}$	$4\frac{7}{32}$	$\frac{11}{32}$	12	35.0	2	$5\frac{5}{32}$	$\frac{1}{2}$
4	$2\frac{1}{4}$	7	12.25	$1\frac{1}{4}$	$4\frac{11}{32}$	$\frac{3}{8}$	12	40.0	2	$5\frac{9}{32}$	$\frac{17}{32}$
$4\frac{1}{2}$	$2\frac{1}{2}$	7	14.75	$1\frac{1}{4}$	$4\frac{7}{16}$	$\frac{3}{8}$					
		7	17.25	$1\frac{1}{2}$	$4\frac{17}{32}$	$\frac{3}{8}$	15	33.0	$1\frac{7}{8}$	$4\frac{29}{32}$	$\frac{21}{32}$
5	$2\frac{3}{4}$	7	19.75	$1\frac{1}{2}$	$4\frac{31}{32}$	$\frac{3}{8}$	15	35.0	$1\frac{7}{8}$	$4\frac{15}{16}$	$\frac{21}{32}$
$5\frac{5}{8}$	$3\frac{1}{4}$						15	40.0	$1\frac{7}{8}$	$5\frac{1}{16}$	$\frac{11}{16}$
		8	11.25	$1\frac{1}{4}$	$4\frac{1}{4}$	$\frac{3}{8}$	15	45.0	$2\frac{1}{4}$	$5\frac{1}{8}$	$\frac{5}{8}$
6	$3\frac{1}{2}$	8	13.75	$1\frac{1}{4}$	$4\frac{5}{16}$	$\frac{13}{32}$	15	50.0	$2\frac{1}{4}$	$5\frac{1}{4}$	$\frac{21}{32}$
		8	16.25	$1\frac{1}{2}$	$4\frac{13}{32}$	$\frac{3}{8}$	15	55.0	$2\frac{1}{4}$	$5\frac{11}{32}$	$\frac{21}{32}$

TABLE III—*Continued.*

MAXIMUM SIZE OF RIVETS IN BEAMS, CHANNELS, AND ANGLES.

I Beams.						Channels.			Angles.			
Depth of Beam, Inches.	Weight per Foot, Pounds.	Size of Rivet, Inches.	Depth of Beam, Inches.	Weight per Foot, Pounds.	Size of Rivet, Inches.	Depth of Channel, Inches.	Weight per Foot, Pounds.	Size of Rivet, Inches.	Length of Leg, Inches.	Size of Rivet, Inches.	Length of Leg, Inches.	Size of Rivet, Inches.
3	5.5	$\frac{3}{8}$	15	42.0	$\frac{3}{4}$	3	4.0	$\frac{3}{8}$	$\frac{3}{4}$	$\frac{1}{4}$	$2\frac{1}{2}$	$\frac{3}{4}$
4	7.5	$\frac{1}{2}$	15	60.0	$\frac{3}{4}$	4	5.25	$\frac{1}{2}$	1	$\frac{3}{8}$	$2\frac{3}{4}$	$\frac{3}{4}$
5	9.75	$\frac{1}{2}$	15	80.0	$\frac{7}{8}$	5	6.50	$\frac{1}{2}$	$1\frac{1}{4}$	$\frac{1}{2}$	3	$\frac{7}{8}$
6	12.25	$\frac{5}{8}$	18	55.0	$\frac{7}{8}$	6	8.0	$\frac{5}{8}$	$1\frac{5}{16}$	$\frac{1}{2}$	$3\frac{1}{2}$	1
7	15.0	$\frac{5}{8}$	20	65.0	1	7	9.75	$\frac{5}{8}$	$1\frac{3}{8}$	$\frac{1}{2}$	4	1
8	17.75	$\frac{3}{4}$	20	80.0	1	8	11.25	$\frac{3}{4}$	$1\frac{1}{2}$	$\frac{1}{2}$	$4\frac{1}{2}$	1
9	21.0	$\frac{3}{4}$	24	80.0	1	9	13.25	$\frac{3}{4}$	$1\frac{3}{4}$	$\frac{5}{8}$	5	1
10	25.0	$\frac{3}{4}$				10	15.0	$\frac{3}{4}$	2	$\frac{5}{8}$	$5\frac{5}{8}$	1
12	31.5	$\frac{3}{4}$				12	20.50	$\frac{3}{4}$	$2\frac{1}{4}$	$\frac{3}{4}$	6	1
12	40.0	$\frac{3}{4}$				15	33.0	$\frac{3}{4}$	$2\frac{5}{16}$	$\frac{3}{4}$		

RIVET SPACING.

All dimensions in inches.

Size of Rivets.	Minimum Pitch.	Maximum Pitch at Ends of Compression Members.	Minimum Pitch in Flanges of Chords and Girders.	Distance from Edge of Piece to Centre of Rivet Hole.	
				Minimum.	Usual.
$\frac{1}{4}$	$\frac{3}{4}$				
$\frac{3}{8}$	$1\frac{1}{8}$				
$\frac{1}{2}$	$1\frac{1}{2}$				
$\frac{5}{8}$	$1\frac{7}{8}$	$2\frac{1}{2}$	4	$\frac{15}{16}$	$1\frac{1}{4}$
$\frac{3}{4}$	$2\frac{1}{4}$	3	4	$1\frac{1}{8}$	$1\frac{1}{2}$
$\frac{7}{8}$	$2\frac{5}{8}$	$3\frac{1}{2}$	4	$1\frac{5}{16}$	$1\frac{3}{4}$
1	3	4	4	$1\frac{1}{2}$	2

Table IV.

RIVETS.

Tables of Areas in Square Inches, to be deducted from Riveted Plates or Shapes to Obtain Net Areas.

Thickness Plates in Inches.	Size of Hole, in Inches.*													
	$\frac{1}{4}$	$\frac{5}{16}$	$\frac{3}{8}$	$\frac{7}{16}$	$\frac{1}{2}$	$\frac{9}{16}$	$\frac{5}{8}$	$\frac{11}{16}$	$\frac{3}{4}$	$\frac{13}{16}$	$\frac{7}{8}$	$\frac{15}{16}$	1	$1\frac{1}{16}$
$\frac{1}{4}$	.06	.08	.09	.11	.13	.14	.16	.17	.19	.20	.22	.23	.25	.27
$\frac{5}{16}$	.08	.10	.12	.14	.16	.18	.20	.21	.23	.25	.27	.29	.31	.33
$\frac{3}{8}$	.09	.12	.14	.16	.19	.21	.23	.26	.28	.30	.33	.35	.38	.40
$\frac{7}{16}$	.11	.14	.16	.19	.22	.25	.27	.30	.33	.36	.38	.41	.44	.46
$\frac{1}{2}$	.13	.16	.19	.22	.25	.28	.31	.34	.38	.41	.44	.47	.50	.53
$\frac{9}{16}$	.14	.18	.21	.25	.28	.32	.35	.39	.42	.46	.49	.53	.56	.60
$\frac{5}{8}$	.16	.20	.23	.27	.31	.35	.39	.43	.47	.51	.55	.59	.63	.66
$\frac{11}{16}$	.17	.21	.26	.30	.34	.39	.43	.47	.52	.56	.60	.64	.69	.73
$\frac{3}{4}$	.19	.23	.28	.33	.38	.42	.47	.52	.56	.61	.66	.70	.75	.80
$\frac{13}{16}$	.20	.25	.30	.36	.41	.46	.51	.56	.61	.66	.71	.76	.81	.86
$\frac{7}{8}$	.22	.27	.33	.38	.44	.49	.55	.60	.66	.71	.77	.82	.88	.93
$\frac{15}{16}$	.23	.29	.35	.41	.47	.53	.59	.64	.70	.76	.82	.88	.94	1.00
1	.25	.31	.38	.44	.50	.56	.63	.69	.75	.81	.88	.94	1.00	1.06
$1\frac{1}{16}$	.27	.33	.40	.46	.53	.60	.66	.73	.80	.86	.93	1.00	1.06	1.13
$1\frac{1}{8}$	.28	.35	.42	.49	.56	.63	.70	.77	.84	.91	.98	1.05	1.13	1.20
$1\frac{5}{16}$	.30	.37	.45	.52	.59	.67	.74	.82	.89	.96	1.04	1.11	1.19	1.26
$1\frac{1}{4}$	.31	.39	.47	.55	.63	.70	.78	.86	.94	1.02	1.09	1.17	1.25	1.33
$1\frac{5}{16}$	.33	.41	.49	.57	.66	.74	.81	.90	.98	1.07	1.15	1.23	1.31	1.39
$1\frac{3}{8}$	.34	.43	.52	.60	.69	.77	.86	.95	1.03	1.12	1.20	1.29	1.38	1.46
$1\frac{7}{16}$	.36	.45	.54	.63	.72	.81	.90	.99	1.08	1.17	1.26	1.35	1.44	1.53
$1\frac{1}{2}$	.38	.47	.56	.66	.75	.84	.94	1.03	1.13	1.22	1.31	1.41	1.50	1.59
$1\frac{9}{16}$	.39	.49	.59	.68	.78	.88	.98	1.07	1.17	1.27	1.37	1.46	1.56	1.66
$1\frac{5}{8}$	.41	.51	.61	.71	.81	.91	1.02	1.12	1.22	1.32	1.42	1.52	1.63	1.73
$1\frac{11}{16}$	.42	.53	.63	.74	.84	.95	1.05	1.16	1.27	1.37	1.47	1.58	1.69	1.79
$1\frac{3}{4}$	.44	.55	.66	.77	.88	.98	1.09	1.20	1.31	1.42	1.53	1.64	1.75	1.86
$1\frac{13}{16}$	.45	.57	.68	.79	.91	1.02	1.13	1.25	1.36	1.47	1.59	1.70	1.81	1.93
$1\frac{7}{8}$	.47	.59	.70	.82	.94	1.05	1.17	1.29	1.41	1.52	1.64	1.76	1.88	1.99
$1\frac{15}{16}$	.48	.61	.73	.85	.97	1.09	1.21	1.33	1.45	1.57	1.70	1.82	1.94	2.06
2	.50	.63	.75	.88	1.00	1.13	1.25	1.38	1.50	1.63	1.75	1.88	2.00	2.13

* Size of hole = diameter of rivet + $\frac{1}{8}''$.

Table V.

WEIGHTS OF ROUND-HEADED RIVETS AND ROUND-HEADED BOLTS WITHOUT NUTS PER 100.

Wrought Iron.

Basis: 1 cubic foot iron = 480 pounds. For steel add 2%.

Length under Head to Point. Inches.	Diameter of Rivet in Inches.						
	$\frac{3}{8}$	$\frac{1}{2}$	$\frac{5}{8}$	$\frac{3}{4}$	$\frac{7}{8}$	1	$1\frac{1}{8}$
1	4.7	9.3	16.0	25.2	37.2	52.6	71.3
$1\frac{1}{4}$	5.5	10.7	18.1	28.3	41.3	58.0	78.2
$1\frac{1}{2}$	6.2	12.1	20.2	31.3	45.5	63.5	85.1
$1\frac{3}{4}$	7.0	13.4	22.4	34.4	49.7	68.9	92.0
2	7.8	14.8	24.5	37.5	53.9	74.4	98.9
$2\frac{1}{4}$	8.5	16.2	26.6	40.5	58.0	79.8	105.8
$2\frac{1}{2}$	9.3	17.5	28.8	43.6	62.2	85.3	112.7
$2\frac{3}{4}$	10.1	18.9	30.9	46.7	66.4	90.7	119.6
3	10.8	20.3	33.0	49.8	70.6	96.2	126.5
$3\frac{1}{4}$	11.6	21.6	35.1	52.8	74.7	102.6	133.4
$3\frac{1}{2}$	12.4	23.0	37.3	55.9	78.9	107.1	140.3
$3\frac{3}{4}$	13.1	24.3	39.4	59.0	83.1	112.6	147.2
4	13.9	25.7	41.5	62.0	87.3	118.0	154.1
$4\frac{1}{4}$	14.7	27.1	43.7	65.1	91.4	123.5	161.0
$4\frac{1}{2}$	15.4	28.4	45.8	68.2	95.6	128.9	167.9
$4\frac{3}{4}$	16.2	29.8	47.9	71.2	99.8	134.4	174.8
5	17.0	31.2	50.1	74.3	104.0	139.8	181.7
$5\frac{1}{4}$	17.7	32.5	52.2	77.4	108.2	145.3	188.6
$5\frac{1}{2}$	18.5	33.9	54.3	80.4	112.3	150.7	195.6
$5\frac{3}{4}$	19.3	35.3	56.4	83.5	116.5	156.2	202.5
6	20.0	36.6	58.6	86.6	120.7	161.6	209.4
$6\frac{1}{4}$	20.8	38.0	60.7	89.6	124.8	167.1	216.3
$6\frac{1}{2}$	21.6	39.3	62.8	92.7	129.0	172.5	223.2
$6\frac{3}{4}$	22.3	40.7	65.0	95.8	133.2	178.0	230.1
7	23.1	42.1	67.1	98.8	137.4	183.5	237.0
$7\frac{1}{4}$	23.9	43.4	69.2	101.9	141.6	188.9	243.9
$7\frac{1}{2}$	24.6	44.8	71.4	105.0	145.7	194.4	250.8
$7\frac{3}{4}$	25.4	46.2	73.5	108.0	149.9	199.8	257.7
8	26.2	47.5	75.6	111.1	154.1	205.3	264.6
$8\frac{1}{2}$	27.7	50.2	79.9	117.2	162.2	216.2	278.4
9	29.2	53.0	84.1	123.4	170.8	227.1	292.2
$9\frac{1}{2}$	30.8	55.7	88.4	129.5	179.1	238.0	306.0
10	32.3	58.4	92.7	135.6	187.5	248.8	319.8
$10\frac{1}{2}$	33.8	61.2	96.9	141.8	195.8	259.8	333.6
11	35.4	63.9	101.2	147.9	204.2	270.7	347.4
$11\frac{1}{2}$	36.9	66.6	105.4	154.1	212.5	281.6	361.2
12	38.	69.3	109.7	160.2	220.9	292.5	375.0
One inch in length of 100 Rivets	3.07	5.45	8.52	12.27	16.70	21.82	27.61
Weight of 100 Rivet Heads.....	1.78	4.82	9.95	16.12	24.29	34.77	47.67

Height of rivet head = $\frac{6}{10}$ diameter of rivet.

Table VI.

WEIGHTS AND DIMENSIONS OF BOLT HEADS.

Manufacturers' Standard Sizes

Basis: Hoopes & Townsend's List.

Diameter of Bolt.	Square.				Hexagon.			
	Short Diameter	Long Diameter	Thickness.	Weight per 100.	Short Diameter	Long Diameter	Thickness.	Weight per 100.
Inches.	Inches.	Inches.	Inches.	Pounds.	Inches.	Inches.	Inches.	Pounds.
$\frac{1}{4}$	$\frac{7}{16}$	.619	$\frac{3}{16}$	1.0	$\frac{7}{16}$	.505		.9
$\frac{5}{16}$	$\frac{1}{2}$	.707	$\frac{1}{4}$	1.7	$\frac{1}{2}$	.578	$\frac{1}{4}$	1.5
$\frac{3}{8}$	$\frac{19}{32}$	.840	$\frac{9}{32}$	2.8	$\frac{19}{32}$	.686		2.4
$\frac{7}{16}$	$\frac{11}{16}$	.972	$\frac{3}{8}$	4.9	$\frac{11}{16}$	.794	$\frac{3}{8}$	4.3
$\frac{1}{2}$	$\frac{3}{4}$	1.061	$\frac{7}{16}$	6.8	$\frac{3}{4}$	.866		5.9
$\frac{9}{16}$	$\frac{27}{32}$	1.193	$\frac{1}{2}$	9.9	$\frac{27}{32}$	.974	$\frac{1}{2}$	8.6
$\frac{5}{8}$	$\frac{15}{16}$	1.326	$\frac{17}{32}$	13.0	$\frac{15}{16}$	1.083		11.2
$\frac{3}{4}$	$1\frac{1}{8}$	1.591	$\frac{5}{8}$	22.0	$1\frac{1}{8}$	1.299	$\frac{5}{8}$	19.0
$\frac{7}{8}$	$1\frac{5}{16}$	1.856	$\frac{3}{4}$	34.8	$1\frac{5}{16}$	1.516	$\frac{3}{4}$	33.1
1	$1\frac{1}{2}$	2.122	$\frac{7}{8}$	54.7	$1\frac{1}{2}$	1.733	$\frac{7}{8}$	47.4
$1\frac{1}{8}$	$1\frac{5}{8}$	2.298	1	73.3	$1\frac{5}{8}$	1.877	1	63.5
$1\frac{1}{4}$	$1\frac{3}{4}$	2.475	$1\frac{1}{8}$	95.7	$1\frac{3}{4}$	2.021	$1\frac{1}{8}$	82.9
$1\frac{3}{8}$	$2\frac{1}{8}$	3.006	$1\frac{1}{4}$	156.8	2	2.309	$1\frac{3}{8}$	132.3
$1\frac{1}{2}$	$2\frac{3}{8}$	3.359	$1\frac{3}{8}$	215.4	$2\frac{3}{8}$	2.743	$1\frac{1}{2}$	203.5
$1\frac{5}{8}$	$2\frac{1}{2}$	3.536	$1\frac{1}{2}$	260.3	$2\frac{1}{2}$	2.888	$1\frac{5}{8}$	244.4
$1\frac{3}{4}$	$2\frac{3}{4}$	3.889	$1\frac{5}{8}$	341.3	$2\frac{3}{4}$	3.176	$1\frac{3}{4}$	318.4
$1\frac{7}{8}$	3	4.243	$1\frac{3}{4}$	437.4	3	3.464	$1\frac{7}{8}$	408.2
2	$3\frac{1}{8}$	4.420	$1\frac{7}{8}$	508.5	$3\frac{1}{8}$	3.610	2	469.9

Approximate rules for dimensions of *finished* nuts and heads for bolts (square and hexagon):

Short diameter of nut $= 1\frac{1}{2}$ diameter of bolt;
Thickness of nut $= 1$ diameter of bolt;
Short diameter of head $= 1\frac{1}{2}$ diameter of bolt;
Thickness of head $= 1$ diameter of bolt;
Long diameter of square nut or head $= 2.12$ diameter of bolt;
" " " hexagon nut or head $= 1.73$ diameter of of bolt.

TABLE V.

WEIGHTS OF ROUND-HEADED RIVETS AND ROUND-HEADED BOLTS WITHOUT NUTS PER 100.

Wrought Iron.

Basis: 1 cubic foot iron = 480 pounds. For steel add 2%.

Length under Head to Point. Inches.	Diameter of Rivet in Inches.						
	$\frac{3}{8}$	$\frac{1}{2}$	$\frac{5}{8}$	$\frac{3}{4}$	$\frac{7}{8}$	1	$1\frac{1}{8}$
1	4.7	9.3	16.0	25.2	37.2	52.6	71.3
$1\frac{1}{4}$	5.5	10.7	18.1	28.3	41.3	58.0	78.2
$1\frac{1}{2}$	6.2	12.1	20.2	31.3	45.5	63.5	85.1
$1\frac{3}{4}$	7.0	13.4	22.4	34.4	49.7	68.9	92.0
2	7.8	14.8	24.5	37.5	53.9	74.4	98.9
$2\frac{1}{4}$	8.5	16.2	26.6	40.5	58.0	79.8	105.8
$2\frac{1}{2}$	9.3	17.5	28.8	43.6	62.2	85.3	112.7
$2\frac{3}{4}$	10.1	18.9	30.9	46.7	66.4	90.7	119.6
3	10.8	20.3	33.0	49.8	70.6	96.2	126.5
$3\frac{1}{4}$	11.6	21.6	35.1	52.8	74.7	102.6	133.4
$3\frac{1}{2}$	12.4	23.0	37.3	55.9	78.9	107.1	140.3
$3\frac{3}{4}$	13.1	24.3	39.4	59.0	83.1	112.6	147.2
4	13.9	25.7	41.5	62.0	87.3	118.0	154.1
$4\frac{1}{4}$	14.7	27.1	43.7	65.1	91.4	123.5	161.0
$4\frac{1}{2}$	15.4	28.4	45.8	68.2	95.6	128.9	167.9
$4\frac{3}{4}$	16.2	29.8	47.9	71.2	99.8	134.4	174.8
5	17.0	31.2	50.1	74.3	104.0	139.8	181.7
$5\frac{1}{4}$	17.7	32.5	52.2	77.4	108.2	145.3	188.6
$5\frac{1}{2}$	18.5	33.9	54.3	80.4	112.3	150.7	195.6
$5\frac{3}{4}$	19.3	35.3	56.4	83.5	116.5	156.2	202.5
6	20.0	36.6	58.6	86.6	120.7	161.6	209.4
$6\frac{1}{4}$	20.8	38.0	60.7	89.6	124.8	167.1	216.3
$6\frac{1}{2}$	21.6	39.3	62.8	92.7	129.0	172.5	223.2
$6\frac{3}{4}$	22.3	40.7	65.0	95.8	133.2	178.0	230.1
7	23.1	42.1	67.1	98.8	137.4	183.5	237.0
$7\frac{1}{4}$	23.9	43.4	69.2	101.9	141.6	188.9	243.9
$7\frac{1}{2}$	24.6	44.8	71.4	105.0	145.7	194.4	250.8
$7\frac{3}{4}$	25.4	46.2	73.5	108.0	149.9	199.8	257.7
8	26.2	47.5	75.6	111.1	154.1	205.3	264.6
$8\frac{1}{2}$	27.7	50.2	79.9	117.2	162.2	216.2	278.4
9	29.2	53.0	84.1	123.4	170.8	227.1	292.2
$9\frac{1}{2}$	30.8	55.7	88.4	129.5	179.1	238.0	306.0
10	32.3	58.4	92.7	135.6	187.5	248.8	319.8
$10\frac{1}{2}$	33.8	61.2	96.9	141.8	195.8	259.8	333.6
11	35.4	63.9	101.2	147.9	204.2	270.7	347.4
$11\frac{1}{2}$	36.9	66.6	105.4	154.1	212.5	281.6	361.2
12	38.	69.3	109.7	160.2	220.9	292.5	375.0
One inch in length of 100 Rivets	3.07	5.45	8.52	12.27	16.70	21.82	27.61
Weight of 100 Rivet Heads.....	1.78	4.82	9.95	16.12	24.29	34.77	47.67

Height of rivet head = $\frac{6}{10}$ diameter of rivet.

Table VI.

WEIGHTS AND DIMENSIONS OF BOLT HEADS.

Manufacturers' Standard Sizes

Basis: Hoopes & Townsend's List.

Diameter of Bolt.	Square.				Hexagon.			
	Short Diameter	Long Diameter	Thickness.	Weight per 100.	Short Diameter	Long Diameter	Thickness.	Weight per 100.
Inches.	Inches.	Inches.	Inches.	Pounds.	Inches.	Inches.	Inches.	Pounds.
$\frac{1}{4}$	$\frac{7}{16}$	.619	$\frac{3}{16}$	1.0	$\frac{7}{16}$	.505		.9
$\frac{5}{16}$	$\frac{1}{2}$	.707	$\frac{1}{4}$	1.7	$\frac{1}{2}$	.578	$\frac{1}{4}$	1.5
$\frac{3}{8}$	$\frac{19}{32}$	.840	$\frac{9}{32}$	2.8	$\frac{19}{32}$	.686		2.4
$\frac{7}{16}$	$\frac{11}{16}$	.972	$\frac{3}{8}$	4.9	$\frac{11}{16}$	.794	$\frac{3}{8}$	4.3
$\frac{1}{2}$	$\frac{3}{4}$	1.061	$\frac{7}{16}$	6.8	$\frac{3}{4}$	.866		5.9
$\frac{9}{16}$	$\frac{27}{32}$	1.193	$\frac{1}{2}$	9.9	$\frac{27}{32}$	.974	$\frac{1}{2}$	8.6
$\frac{5}{8}$	$\frac{15}{16}$	1.326	$\frac{17}{32}$	13.0	$\frac{15}{16}$	1.083		11.2
$\frac{3}{4}$	$1\frac{1}{8}$	1.591	$\frac{5}{8}$	22.0	$1\frac{1}{8}$	1.299	$\frac{5}{8}$	19.0
$\frac{7}{8}$	$1\frac{5}{16}$	1.856	$\frac{3}{4}$	34.8	$1\frac{5}{16}$	1.516	$\frac{3}{4}$	33.1
1	$1\frac{1}{2}$	2.122	$\frac{7}{8}$	54.7	$1\frac{1}{2}$	1.733	$\frac{7}{8}$	47.4
$1\frac{1}{8}$	$1\frac{5}{8}$	2.298	1	73.3	$1\frac{5}{8}$	1.877	1	63.5
$1\frac{1}{4}$	$1\frac{3}{4}$	2.475	$1\frac{1}{8}$	95.7	$1\frac{3}{4}$	2.021	$1\frac{1}{8}$	82.9
$1\frac{3}{8}$	$2\frac{1}{8}$	3.006	$1\frac{1}{4}$	156.8	2	2.309	$1\frac{3}{8}$	132.3
$1\frac{1}{2}$	$2\frac{3}{8}$	3.359	$1\frac{3}{8}$	215.4	$2\frac{3}{8}$	2.743	$1\frac{1}{2}$	203.5
$1\frac{5}{8}$	$2\frac{1}{2}$	3.536	$1\frac{1}{2}$	260.3	$2\frac{1}{2}$	2.888	$1\frac{5}{8}$	244.4
$1\frac{3}{4}$	$2\frac{3}{4}$	3.889	$1\frac{5}{8}$	341.3	$2\frac{3}{4}$	3.176	$1\frac{3}{4}$	318.4
$1\frac{7}{8}$	3	4.243	$1\frac{3}{4}$	437.4	3	3.464	$1\frac{7}{8}$	408.2
2	$3\frac{1}{8}$	4.420	$1\frac{7}{8}$	508.5	$3\frac{1}{8}$	3.610	2	469.9

Approximate rules for dimensions of *finished* nuts and heads for bolts (square and hexagon)·

Short diameter of nut $= 1\frac{1}{2}$ diameter of bolt;
Thickness of nut $= 1$ diameter of bolt;
Short diameter of head $= 1\frac{1}{2}$ diameter of bolt;
Thickness of head $= 1$ diameter of bolt;
Long diameter of square nut or head $= 2.12$ diameter of bolt;
" " " hexagon nut or head $= 1.73$ diameter of of bolt.

DIMENSIONS OF UPSET END.				DIMENSIONS AND PROPORTIONS OF BODY OF BAR.								
Diameter of Screw. B	Length of Upset. G	Area at Root of Thread.	Number of Threads per Inch.	Diameter of Bar. A	Area at Body of Bar.	Weight per Foot of Bar.	Add for Upset.	Excess of Area of Thread over that of Body of Bar.	Diameter of Bar. A	Area of Body of Bar.	Weight per Foot of Bar.	Add for Upset.	Excess of Area at Root of Thread over that of Body of Bar.
In.	In.	Sq. In		In.	Sq. In.	Lbs.	In.	Pr Ct.	In.	Sq. In.	Lbs.	In.	Pr Ct.
$\frac{3}{4}$	$4\frac{1}{4}$	.302	10	$\frac{1}{2}$	.196	1.668	$6\frac{1}{2}$	54	$\frac{9}{16}$	.249	.845	$4\frac{1}{4}$	21
$\frac{7}{8}$	$4\frac{1}{2}$	.420	9	$\frac{5}{8}$	.307	1.043	$5\frac{1}{2}$	37					
1	$4\frac{1}{2}$	.550	8	$\frac{11}{16}$	.371	1.262	$6\frac{1}{4}$	48	$\frac{3}{4}$	.442	1.502	$4\frac{1}{2}$	25
$1\frac{1}{8}$	$4\frac{3}{4}$	.694	7	$\frac{13}{16}$	.519	1.763	$5\frac{1}{2}$	34					
$1\frac{1}{4}$	$4\frac{3}{4}$	.893	7	$\frac{7}{8}$	.601	2.044	$6\frac{1}{4}$	49	$\frac{15}{16}$	.690	2.347	$4\frac{1}{2}$	29
$1\frac{3}{8}$	5	1.057	6	1	.785	2.67	$4\frac{1}{2}$	35	$1\frac{1}{16}$	.887	3.01	$4\frac{1}{4}$	19
$1\frac{1}{2}$	5	1.295	6	$1\frac{1}{8}$	.994	3.38	$4\frac{3}{4}$	30	$1\frac{3}{16}$	1.108	3.77	$3\frac{3}{4}$	17
$1\frac{5}{8}$	$5\frac{1}{4}$	1.515	$5\frac{1}{2}$	$1\frac{1}{4}$	1.227	4.17	$4\frac{1}{2}$	23					
$1\frac{3}{4}$	$5\frac{1}{4}$	1.744	5	$1\frac{5}{16}$	1.353	4.60	5	29	$1\frac{3}{8}$	1.485	5.05	4	18
$1\frac{7}{8}$	$5\frac{1}{2}$	2.048	5	$1\frac{7}{16}$	1.623	5.52	$4\frac{3}{4}$	26					
2	$5\frac{1}{2}$	2.302	$4\frac{1}{2}$	$1\frac{1}{2}$	1.767	6.01	$5\frac{1}{4}$	30	$1\frac{9}{16}$	1.918	6.52	$4\frac{1}{2}$	20
$2\frac{1}{8}$	$5\frac{3}{4}$	2.650	$4\frac{1}{2}$	$1\frac{5}{8}$	2.074	7.05	5	28	$1\frac{11}{16}$	2.237	7.60	$4\frac{1}{4}$	18
$2\frac{1}{4}$	$5\frac{3}{4}$	3.023	$4\frac{1}{2}$	$1\frac{3}{4}$	2.405	8.18	$4\frac{3}{4}$	26	$1\frac{13}{16}$	2.580	8.77	4	17
$2\frac{3}{8}$	6	3.419	$4\frac{1}{2}$	$1\frac{7}{8}$	2.761	9.39	$4\frac{1}{2}$	24					
$2\frac{1}{2}$	6	3.715	4	$1\frac{15}{16}$	2.948	10.02	5	26	2	3.142	10.68	$3\frac{1}{2}$	18
$2\frac{5}{8}$	$6\frac{1}{4}$	4.155	4	$2\frac{1}{16}$	3.341	11.36	$4\frac{3}{4}$	24	$2\frac{1}{8}$	3.547	12.06	4	17
$2\frac{3}{4}$	$6\frac{1}{4}$	4.619	4	$2\frac{3}{16}$	3.758	12.78	$4\frac{1}{2}$	23					
$2\frac{7}{8}$	$6\frac{1}{2}$	5.108	4	$2\frac{1}{4}$	3.976	13.52	$5\frac{1}{4}$	28	$2\frac{5}{16}$	4.200	14.28	$4\frac{1}{2}$	22
3	$6\frac{1}{2}$	5.428	$3\frac{1}{2}$	$2\frac{3}{8}$	4.430	15.07	$4\frac{3}{4}$	23					
$3\frac{1}{8}$	$6\frac{3}{4}$	5.957	$3\frac{1}{2}$	$2\frac{7}{16}$	4.666	15.86	$5\frac{1}{2}$	28	$2\frac{1}{2}$	4.909	16.69	$4\frac{3}{4}$	21
$3\frac{1}{4}$	$6\frac{3}{4}$	6.510	$3\frac{1}{2}$	$2\frac{9}{16}$	5.157	17.53	$5\frac{1}{4}$	26	$2\frac{5}{8}$	5.412	18.40	$4\frac{1}{2}$	20
$3\frac{3}{8}$	7	7.087	$3\frac{1}{2}$	$2\frac{11}{16}$	5.673	19.29	5	25	$2\frac{3}{4}$	5.940	20.20	$4\frac{1}{2}$	19
$3\frac{1}{2}$	7	7.548	$3\frac{1}{4}$	$2\frac{13}{16}$	6.231	21.12	$4\frac{3}{4}$	22					
$3\frac{5}{8}$	$7\frac{1}{4}$	8.171	$3\frac{1}{4}$	$2\frac{7}{8}$	6.492	22.07	$5\frac{1}{4}$	26	$2\frac{15}{16}$	6.777	23.04	$4\frac{3}{4}$	21
$3\frac{3}{4}$	$7\frac{1}{4}$	8.641	3	3	7.069	24.03	$6\frac{1}{4}$	22					
$3\frac{7}{8}$	$7\frac{1}{2}$	9.305	3	$3\frac{1}{8}$	7.670	26.08	$5\frac{1}{4}$	21					
4	$7\frac{1}{2}$	9.993	3	$3\frac{1}{4}$	8.296	28.20	$4\frac{3}{4}$	20					

Dimensions of Nuts from Edge Moor Bridge Works' Standard.

Diameter of Screw.	Length of Upset.	Diameter of Bar.	Side of Square Bar.	Length of Nut.	Length of Thread.	Diameter of Hex.	Weight of	
							One Nut.	One Nut and Two Screw Ends.
B	G	A	A	L	T	W		
Inches.	Inches.	Inches.	Inches.	Inches.	Inches.	Inches.	Pounds.	Lbs.
$\frac{7}{8}$	$4\frac{1}{2}$	$\frac{5}{8}$	$\frac{9}{16}$	6	$1\frac{7}{16}$	$1\frac{5}{8}$	$1\frac{3}{4}$	$4\frac{1}{4}$
1	$4\frac{1}{2}$	$\frac{11}{16}$ and $\frac{3}{4}$	$\frac{5}{8}$ and $\frac{11}{16}$	6	$1\frac{7}{16}$	$1\frac{5}{8}$	$1\frac{3}{4}$	$4\frac{1}{4}$
$1\frac{1}{8}$	$4\frac{3}{4}$	$\frac{13}{16}$	$\frac{3}{4}$	$6\frac{1}{2}$	$1\frac{5}{8}$	2	3	$7\frac{1}{2}$
$1\frac{1}{4}$	$4\frac{3}{4}$	$\frac{7}{8}$ " $\frac{15}{16}$	$\frac{13}{16}$	$6\frac{1}{2}$	$1\frac{5}{8}$	2	3	$7\frac{1}{2}$
$1\frac{3}{8}$	5	1 " $1\frac{1}{16}$	$\frac{7}{8}$ " $\frac{15}{16}$	7	$1\frac{7}{8}$	$2\frac{3}{8}$	$4\frac{3}{4}$	$11\frac{3}{4}$
$1\frac{1}{2}$	5	$1\frac{1}{8}$ " $1\frac{3}{16}$	1	7	$1\frac{7}{8}$	$2\frac{3}{8}$	$4\frac{3}{4}$	$11\frac{3}{4}$
$1\frac{5}{8}$	$5\frac{1}{4}$	$1\frac{1}{4}$	$1\frac{1}{16}$ " $1\frac{1}{8}$	$7\frac{1}{2}$	$2\frac{1}{16}$	$2\frac{3}{4}$	$6\frac{3}{4}$	$16\frac{3}{4}$
$1\frac{3}{4}$	$5\frac{1}{4}$	$1\frac{5}{16}$	$1\frac{3}{16}$	$7\frac{1}{2}$	$2\frac{1}{16}$	$2\frac{3}{4}$	$6\frac{3}{4}$	$16\frac{3}{4}$
$1\frac{7}{8}$	$5\frac{1}{2}$	$1\frac{7}{16}$ " $1\frac{3}{8}$	$1\frac{1}{4}$ " $1\frac{5}{16}$	8	$2\frac{5}{16}$	$3\frac{1}{8}$	$9\frac{1}{4}$	$23\frac{1}{4}$
2	$5\frac{1}{2}$	$1\frac{1}{2}$ " $1\frac{9}{16}$	$1\frac{3}{8}$	8	$2\frac{5}{16}$	$3\frac{1}{8}$	$9\frac{1}{4}$	$23\frac{1}{4}$
$2\frac{1}{8}$	$5\frac{3}{4}$	$1\frac{5}{8}$ " $1\frac{11}{16}$	$1\frac{7}{16}$ " $1\frac{1}{2}$	$8\frac{1}{2}$	$2\frac{1}{2}$	$3\frac{1}{2}$	$12\frac{1}{2}$	$31\frac{1}{2}$
$2\frac{1}{4}$	$5\frac{3}{4}$	$1\frac{3}{4}$ " $1\frac{13}{16}$	$1\frac{9}{16}$	$8\frac{1}{2}$	$2\frac{1}{2}$	$3\frac{1}{2}$	$12\frac{1}{2}$	$31\frac{1}{2}$
$2\frac{3}{8}$	6	$1\frac{7}{8}$	$1\frac{5}{8}$ " $1\frac{11}{16}$	9	$2\frac{3}{4}$	$3\frac{7}{8}$	$16\frac{3}{4}$	$41\frac{3}{4}$
$2\frac{1}{2}$	6	$1\frac{15}{16}$ " 2	$1\frac{3}{4}$	9	$2\frac{3}{4}$	$3\frac{7}{8}$	$16\frac{3}{4}$	$41\frac{3}{4}$
$2\frac{5}{8}$	$6\frac{1}{4}$	$2\frac{1}{16}$ " $2\frac{1}{8}$	$1\frac{13}{16}$ " $1\frac{7}{8}$	$9\frac{1}{2}$	$2\frac{15}{16}$	$4\frac{1}{4}$	$21\frac{1}{2}$	$53\frac{1}{4}$
$2\frac{3}{4}$	$6\frac{1}{4}$	$2\frac{3}{16}$	$1\frac{15}{16}$	$9\frac{1}{2}$	$2\frac{15}{16}$	$4\frac{1}{4}$	$21\frac{1}{2}$	$53\frac{1}{4}$
$2\frac{7}{8}$	$6\frac{1}{2}$	$2\frac{1}{4}$ " $2\frac{5}{16}$	2 " $2\frac{1}{16}$	10	$3\frac{1}{16}$	$4\frac{5}{8}$	$26\frac{1}{2}$	$66\frac{1}{4}$
3	$6\frac{1}{2}$	$2\frac{3}{8}$	$2\frac{1}{8}$	10	$3\frac{1}{16}$	$4\frac{5}{8}$	$26\frac{1}{2}$	$66\frac{1}{4}$
$3\frac{1}{4}$	$6\frac{3}{4}$	$2\frac{9}{16}$ " $2\frac{5}{8}$	$2\frac{5}{16}$	$10\frac{1}{2}$	$3\frac{3}{8}$	5	32	81
$3\frac{1}{2}$	7	$2\frac{13}{16}$	$2\frac{1}{2}$	11	$3\frac{5}{8}$	$5\frac{3}{8}$	$38\frac{1}{4}$	$97\frac{3}{4}$
$3\frac{3}{4}$	$7\frac{1}{4}$	3	$2\frac{11}{16}$	$11\frac{1}{2}$	$3\frac{13}{16}$	$5\frac{3}{4}$	45	116
4	$7\frac{1}{2}$	$3\frac{1}{4}$	$2\frac{7}{8}$	12	$4\frac{1}{16}$	$6\frac{1}{8}$	$53\frac{1}{2}$	138

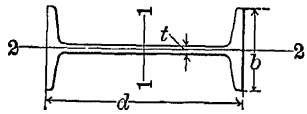

1	2	3	4	5	6	7	8	9	10	11
Section Number.	Depth of Beam.	Weight per Foot.	Area of Section.	Thickness of Web.	Width of Flange.	Moment of Inertia Axis 1-1.	Section Modulus Axis 1-1.	Radius of Gyration Axis 1-1.	Moment of Inertia Axis 2-2.	Radius of Gyration Axis 2-2.
	d		A	t	b	I	S	r	I′	r′
	ches.	Pounds.	Sq. Inches.	Inches.	Inches.	Inches.[4]	Inches.[3]	Inches.	Inches.[4]	Inches.
B 5	3	5.5	1.63	.17	2.33	2.5	1.7	1.23	.46	.53
B 5	3	6.5	1.91	.26	2.42	2.7	1.8	1.19	.53	.52
B 5	3	7.5	2.21	.36	2.52	2.9	1.9	1.15	.60	.52
B 9	4	7.5	2.21	.19	2.66	6.0	3.0	1.64	.77	.59
B 9	4	8.5	2.50	.26	2.73	6.4	3.2	1.59	.85	.58
B 9	4	9.5	2.79	.34	2.81	6.7	3.4	1.54	.93	.58
B 9	4	10.5	3.09	.41	2.88	7.1	3.6	1.52	1.01	.57
B 13	5	9.75	2.87	.21	3.00	12.1	4.8	2.05	1.23	.65
B 13	5	12.25	3.60	.36	3.15	13.6	5.4	1.94	1.45	.63
B 13	5	14.75	4.34	.50	3.29	15.1	6.1	1.87	1.70	.63
B 17	6	12.25	3.61	.23	3.33	21.8	7.3	2.46	1.85	.72
B 17	6	14.75	4.34	.35	3.45	24.0	8.0	2.35	2.09	.69
B 17	6	17.25	5.07	.47	3.57	26.2	8.7	2.27	2.36	.68
B 21	7	15.0	4.42	.25	3.66	36.2	10.4	2.86	2.67	.78
B 21	7	17.5	5.15	.35	3.76	39.2	11.2	2.76	2.94	.76
B 21	7	20.0	5.88	.46	3.87	42.2	12.1	2.68	3.24	.74
B 25	8	17.75	5.33	.27	4.00	56.9	14.2	3.27	3.78	.84
B 25	8	20.25	5.96	.35	4.08	60.2	15.0	3.18	4.04	.82
B 25	8	22.75	6.69	.44	4.17	64.1	16.0	3.10	4.36	.81
B 25	8	25.25	7.43	.53	4.26	68.0	17.0	3.03	4.71	.80

1	2	3	4	5	6	7	8	9	10	11
Section Number.	Depth of Beam.	Weight per Foot.	Area of Section.	Thickness of Web.	Width of Flange.	Moment of Inertia Axis 1-1.	Section Modulus Axis 1-1.	Radius of Gyration Axis 1-1.	Moment of Inertia Axis 2-2.	Radius of Gyration Axis 2-2.
	d		A	t	b	I	S	r	I′	r′
	Inches.	Pounds.	Sq. Inches.	Inches.	Inches.	Inches.^{4}	Inches.^{3}	Inches.	Inches.^{4}	Inches.
B 29	9	21.0	6.31	.29	4.33	84.9	18.9	3.67	5.16	.90
B 29	9	25.0	7.35	.41	4.45	91.9	20.4	3.54	5.65	.88
B 29	9	30.0	8.82	.57	4.61	101.9	22.6	3.40	6.42	.85
B 29	9	35.0	10.29	.73	4.77	111.8	24.8	3.30	7.31	.84
B 33	10	25.0	7.37	.31	4.66	122.1	24.4	4.07	6.89	.97
B 33	10	30.0	8.82	.45	4.80	134.2	26.8	3.90	7.65	.93
B 33	10	35.0	10.29	.60	4.95	146.4	29.3	3.77	8.52	.91
B 33	10	40.0	11.76	.75	5.10	158.7	31.7	3.67	9.50	.90
B 41	12	31.5	9.26	.35	5.00	215.8	36.0	4.83	9.50	1.01
B 41	12	35.0	10.29	.44	5.09	228.3	38.0	4.71	10.07	.99
B 41	12	40.0	11.76	.56	5.21	245.9	41.0	4.57	10.95	.96
B 53	15	42.0	12.48	.41	5.50	441.8	58.9	5.95	14.62	1.08
B 53	15	45.0	13.24	.46	5.55	455.8	60.8	5.87	15.09	1.07
B 53	15	50.0	14.71	.56	5.65	483.4	64.5	5.73	16.04	1.04
B 53	15	55.0	16.18	.66	5.75	511.0	68.1	5.62	17.06	1.03
B 53	15	60.0	17.65	.75	5.84	538.6	71.8	5.52	18.17	1.01
B 65	18	55.0	15.93	.46	6.00	795.6	88.4	7.07	21.19	1.15
B 65	18	60.0	17.65	.56	6.10	841.8	93.5	6.91	22.38	1.13
B 65	18	65.0	19.12	.64	6.18	881.5	97.9	6.79	23.47	1.11
B 65	18	70.0	20.59	.72	6.26	921.2	102.4	6.69	24.62	1.09
B 73	20	65.0	19.08	.50	6.25	1169.5	117.0	7.83	27.86	1.21
B 73	20	70.0	20.59	.58	6.33	1219.8	122.0	7.70	29.04	1.19
B 73	20	75.0	22.06	.65	6.40	1268.8	126.9	7.58	30.25	1.17
B 89	24	80.0	23.32	.50	7.00	2087.2	173.9	9.46	42.86	1.36
B 89	24	85.0	25.00	.57	7.07	2167.8	180.7	9.31	44.35	1.33
B 89	24	90.0	26.47	.63	7.13	2238.4	186.5	9.20	45.70	1.31
B 89	24	95.0	27.94	.69	7.19	2309.0	192.4	9.09	77.10	1.30
B 89	24	100.0	29.41	.75	7.25	2379.6	198.3	8.99	48.55	1.28

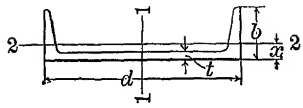

1	2	3	4	5	6	7	8	9	10	11	12	13
Section Number.	Depth of Channel.	Weight per Foot.	Area of Section.	Thickness of Web.	Width of Flange.	Moment of Inertia Axis 1-1.	Section Modulus Axis 1-1.	Radius of Gyration Axis 1-1.	Moment of Inertia Axis 2-2.	Section Modulus Axis 2-2.	Radius of Gyration Axis 2-2.	Distance of Centre of Gravity from Outside of Web.
	d		A	t	b	I	S	r	I′	S′	r′	x
	Ins.	Lbs.	Sq. In.	Inches	Inches	Ins.^{4}	Ins.^{3}	Inches	Ins.^{4}	Ins.^{3}	Inches	Inches
C 5	3	4.00	1.19	.17	1.41	1.6	1.1	1.17	.20	.21	.41	.44
C 5	3	5.00	1.47	.26	1.50	1.8	1.2	1.12	.25	.24	.41	.44
C 5	3	6.00	1.76	.36	1.60	2.1	1.4	1.08	.31	.27	.42	.46
C 9	4	5.25	1.55	.18	1.58	3.8	1.9	1.56	.32	.29	.45	.46
C 9	4	6.25	1.84	.25	1.65	4.2	2.1	1.51	.38	.32	.45	.46
C 9	4	7.25	2.13	.33	1.73	4.6	2.3	1.46	.44	.35	.46	.46
C 13	5	6.50	1.95	.19	1.75	7.4	3.0	1.95	.48	.38	.50	.49
C 13	5	9.00	2.65	.33	1.89	8.9	3.5	1.83	.64	.45	.49	.48
C 13	5	11.50	3.38	.48	2.04	10.4	4.2	1.75	.82	.54	.49	.51
C 17	6	8.00	2.38	.20	1.92	13.0	4.3	2.34	.70	.50	.54	.52
C 17	6	10.50	3.09	.32	2.04	15.1	5.0	2.21	.88	.57	.53	.50
C 17	6	13.00	3.82	.44	2.16	17.3	5.8	2.13	1.07	.65	.53	.52
C 17	6	15.50	4.56	.56	2.28	19.5	6.5	2.07	1.28	.74	.53	.55
C 21	7	9.75	2.85	.21	2.09	21.1	6.0	2.72	.98	.63	.59	.55
C 21	7	12.25	3.60	.32	2.20	24.2	6.9	2.59	1.19	.71	.57	.53
C 21	7	14.75	4.34	.42	2.30	27.2	7.8	2.50	1.40	.79	.57	.53
C 21	7	17.25	5.07	.53	2.41	30.2	8.6	2.44	1.62	.87	.56	.55
C 21	7	19.75	5.81	.63	2.51	33.2	9.5	2.39	1.85	.96	.56	.58
C 25	8	11.25	3.35	.22	2.26	32.3	8.1	3.10	1.33	.79	.63	.58
C 25	8	13.75	4.04	.31	2.35	36.0	9.0	2.98	1.55	.87	.62	.56
C 25	8	16.25	4.78	.40	2.44	39.9	10.0	2.89	1.78	.95	.61	.56
C 25	8	18.75	5.51	.49	2.53	43.8	11.0	2.82	2.01	1.02	.60	.57
C 25	8	21.25	6.25	.58	2.62	47.8	11.9	2.76	2.25	1.11	.60	.59

1	2	3	4	5	6	7	8	9	10	11	12	13
Section Number.	Depth of Channel.	Weight per Foot.	Area of Section.	Thickness of Web.	Width of Flange.	Moment of Inertia Axis 1-1.	Section Modulus Axis 1-1.	Radius of Gyration Axis 1-1.	Moment of Inertia Axis 2-2.	Section Modulus Axis 2-2.	Radius of Gyration Axis 2-2.	Distance of Centre of Gravity from Outside of Web.
	d		A	t	b	I	S	r	I′	S′	r′	x
	Ins.	Lbs.	Sq. In.	Inches	Inches	Ins.^{4}	Ins.^{3}	Inches	Ins.^{4}	Ins.^{3}	Inches	Inches
C 29	9	13.25	3.89	.23	2.43	47.3	10.5	3.49	1.77	.97	.67	.61
C 29	9	15.00	4.41	.29	2.49	50.9	11.3	3.40	1.95	1.03	.66	.59
C 29	9	20.00	5.88	.45	2.65	60.8	13.5	3.21	2.45	1.19	.65	.58
C 29	9	25.00	7.35	.61	2.81	70.7	15.7	3.10	2.98	1.36	.64	.62
C 33	10	15.00	4.46	.24	2.60	66.9	13.4	3.87	2.30	1.17	.72	.64
C 33	10	20.00	5.88	.38	2.74	78.7	15.7	3.66	2.85	1.34	.70	.61
C 33	10	25.00	7.35	.53	2.89	91.0	18.2	3.52	3.40	1.50	.68	.62
C 33	10	30.00	8.82	.68	3.04	103.2	20.6	3.42	3.99	1.67	.67	.65
C 33	10	35.00	10.29	.82	3.18	115.5	23.1	3.35	4.66	1.87	.67	.69
C 41	12	20.50	6.03	.28	2.94	128.1	21.4	4.61	3.91	1.75	.81	.70
C 41	12	25.00	7.35	.39	3.05	144.0	24.0	4.43	4.53	1.91	.78	.68
C 41	12	30.00	8.82	.51	3.17	161.6	26.9	4.28	5.21	2.09	.77	.68
C 41	12	35.00	10.29	.64	3.30	179.3	29.9	4.17	5.90	2.27	.76	.69
C 41	12	40.00	11.76	.76	3.42	196.9	32.8	4.09	6.63	2.46	.75	.72
C 53	15	33.00	9.90	.40	3.40	312.6	41.7	5.62	8.23	3.16	.91	.79
C 53	15	35.00	10.29	.43	3.43	319.9	42.7	5.57	8.48	3.22	.91	.79
C 53	15	40.00	11.76	.52	3.52	347.5	46.3	5.44	9.39	3.43	.89	.78
C 53	15	45.00	13.24	.62	3.62	375.1	50.0	5.32	10.29	3.63	.88	.79
C 53	15	50.00	14.71	.72	3.72	402.7	53.7	5.23	11.22	3.85	.87	.80
C 53	15	55.00	16.18	.82	3.82	430.2	57.4	5.16	12.19	4.07	.87	.82

1	2	3	4	5	6	7	8	9	10	11	12	13
Section Number.	Dimensions.	Thickness.	Weight per Foot.	Area of Section.	Distance of Centre of Gravity from Back of Flange.	Moment of Inertia Axis 1–1.	Section Modulus Axis 1–1.	Radius of Gyration Axis 1–1.	Distance of Cen. of Grav. from Ext. Apex on Line Inclined at 45° to Flange.	Least Moment of Inertia Axis 2–2.	Section Modulus Axis 2–2.	Least Radius of Gyration Axis 2–2.
	a×a	t		A	x	I	S	r	x″	I″	S″	r″
	Inches.	Ins.	Lbs.	Sq. In	Inches	Ins.⁴	Ins.³	Inches	Inches	Ins.⁴	Ins.³	Ins.
A 5	$\frac{3}{4}\times\frac{3}{4}$	$\frac{1}{8}$	.58	.17	.23	.009	.017	.22	.33	.004	.011	.14
A 5	$\frac{3}{4}\times\frac{3}{4}$	$\frac{3}{16}$	.84	.25	.25	.012	.024	.22	.36	.005	.014	.14
A 7	1 × 1	$\frac{1}{8}$	.80	.23	.30	.022	.031	.30	.42	.009	.021	.19
A 7	1 × 1	$\frac{3}{16}$	1.16	.34	.32	.030	.044	.30	.45	.013	.028	.19
A 7	1 × 1	$\frac{1}{4}$	1.49	.44	.34	.037	.056	.29	.48	.016	.034	.19
A 9	$1\frac{1}{4}\times1\frac{1}{4}$	$\frac{1}{8}$	1.02	.30	.36	.044	.049	.38	.51	.018	.035	.24
A 9	$1\frac{1}{4}\times1\frac{1}{4}$	$\frac{3}{16}$	1.47	.43	.38	.061	.071	.38	.54	.025	.047	.24
A 9	$1\frac{1}{4}\times1\frac{1}{4}$	$\frac{1}{4}$	1.91	.56	.40	.077	.091	.37	.57	.033	.057	.24
A 9	$1\frac{1}{4}\times1\frac{1}{4}$	$\frac{5}{16}$	2.32	.68	.42	.090	.109	.36	.60	.040	.066	.24
A 11	$1\frac{1}{2}\times1\frac{1}{2}$	$\frac{3}{16}$	1.79	.53	.44	.11	.104	.46	.63	.045	.072	.29
A 11	$1\frac{1}{2}\times1\frac{1}{2}$	$\frac{1}{4}$	2.34	.69	.47	.14	.134	.45	.66	.058	.088	.29
A 11	$1\frac{1}{2}\times1\frac{1}{2}$	$\frac{5}{16}$	2.86	.84	.49	.16	.162	.44	.69	.070	.101	.29
A 11	$1\frac{1}{2}\times1\frac{1}{2}$	$\frac{3}{8}$	3.35	.98	.51	.19	.188	.44	.72	.082	.114	.29
A 13	$1\frac{3}{4}\times1\frac{3}{4}$	$\frac{3}{16}$	2.11	.62	.51	.18	.14	.54	.72	.073	.10	.34
A 13	$1\frac{3}{4}\times1\frac{3}{4}$	$\frac{1}{4}$	2.77	.81	.53	.23	.19	.53	.75	.094	.13	.34
A 13	$1\frac{3}{4}\times1\frac{3}{4}$	$\frac{5}{16}$	3.39	1.00	.55	.27	.23	.52	.78	.113	.15	.34
A 13	$1\frac{3}{4}\times1\frac{3}{4}$	$\frac{3}{8}$	3.98	1.17	.57	.31	.26	.51	.81	.133	.16	.34
A 13	$1\frac{3}{4}\times1\frac{3}{4}$	$\frac{7}{16}$	4.56	1.34	.59	.35	.30	.51	.84	.152	.18	.34
A 15	2 × 2	$\frac{3}{16}$	2.43	.71	.57	.27	.19	.62	.80	.11	.14	.39
A 15	2 × 2	$\frac{1}{4}$	3.19	.94	.59	.35	.25	.61	.84	.14	.17	.39
A 15	2 × 2	$\frac{5}{16}$	3.92	1.15	.61	.42	.30	.60	.87	.17	.20	.39
A 15	2 × 2	$\frac{3}{8}$	4.62	1.36	.64	.48	.35	.59	.90	.20	.22	.39
A 15	2 × 2	$\frac{7}{16}$	5.30	1.56	.66	.54	.40	.59	.93	.23	.25	.38
A 17	$2\frac{1}{2}\times2\frac{1}{2}$	$\frac{1}{4}$	4.0	1.19	.72	.70	.39	.77	1.01	.29	.28	.49
A 17	$2\frac{1}{2}\times2\frac{1}{2}$	$\frac{5}{16}$	5.0	1.46	.74	.85	.48	.76	1.05	.35	.33	.49
A 17	$2\frac{1}{2}\times2\frac{1}{2}$	$\frac{3}{8}$	5.9	1.73	.76	.98	.57	.75	1.08	.41	.38	.48
A 17	$2\frac{1}{2}\times2\frac{1}{2}$	$\frac{7}{16}$	6.8	2.00	.78	1.11	.65	.75	1.11	.46	.42	.48
A 17	$2\frac{1}{2}\times2\frac{1}{2}$	$\frac{1}{2}$	7.7	2.25	.81	1.23	.72	.74	1.14	.52	.46	.48

Section Number	Dimensions	Thickness	Weight per Foot	Area of Section	Distance of Gravity from Edge of Flange	Moment of Inertia Axis 1	Section Modulus Axis 1	Radius of Gyration Axis 1	Distance of Center from Ext. Angle Inclined at 45°	Least Moment of Inertia Axis 2	Section Modulus Axis 2	Least Radius of Gyration Axis 2
	a×a	t		A	x	I	S	r	x″	I″	S″	r″
	Inches	Ins.	Lbs.	Sq.In	Inches	Ins.^{4}	Ins.^{3}	Inches	Inches	Ins.^{4}	Ins.^{3}	Inches
A 19	3 ×3	$\frac{1}{4}$	4.9	1.44	.84	1.24	.58	.93	1.19	.50	.42	.59
A 19	3 ×3	$\frac{5}{16}$	6.0	1.78	.87	1.51	.71	.92	1.22	.61	.50	.59
A 19	3 ×3	$\frac{3}{8}$	7.2	2.11	.89	1.76	.83	.91	1.26	.72	.57	.58
A 19	3 ×3	$\frac{7}{16}$	8.3	2.43	.91	1.99	.95	.91	1.29	.82	.64	.58
A 19	3 ×3	$\frac{1}{2}$	9.4	2.75	.93	2.22	1.07	.90	1.32	.92	.70	.58
A 19	3 ×3	$\frac{9}{16}$	10.4	3.06	.95	2.43	1.19	.89	1.35	1.02	.76	.58
A 19	3 ×3	$\frac{5}{8}$	11.4	3.36	.98	2.62	1.30	.88	1.38	1.12	.81	.58
A 21	$3\frac{1}{2}\times3\frac{1}{2}$	$\frac{3}{8}$	8.4	2.48	1.01	2.87	1.15	1.07	1.43	1.16	.81	.68
A 21	$3\frac{1}{2}\times3\frac{1}{2}$	$\frac{7}{16}$	9.8	2.87	1.04	3.26	1.32	1.07	1.46	1.33	.91	.68
A 21	$3\frac{1}{2}\times3\frac{1}{2}$	$\frac{1}{2}$	11.1	3.25	1.06	3.64	1.49	1.06	1.50	1.50	1.00	.68
A 21	$3\frac{1}{2}\times3\frac{1}{2}$	$\frac{9}{16}$	12.3	3.62	1.08	3.99	1.65	1.05	1.53	1.66	1.09	.68
A 21	$3\frac{1}{2}\times3\frac{1}{2}$	$\frac{5}{8}$	13.5	3.98	1.10	4.33	1.81	1.04	1.56	1.82	1.17	.68
A 21	$3\frac{1}{2}\times3\frac{1}{2}$	$\frac{11}{16}$	14.8	4.34	1.12	4.65	1.96	1.04	1.59	1.97	1.24	.67
A 21	$3\frac{1}{2}\times3\frac{1}{2}$	$\frac{3}{4}$	15.9	4.69	1.15	4.96	2.11	1.03	1.62	2.13	1.31	.67
A 21	$3\frac{1}{2}\times3\frac{1}{2}$	$\frac{13}{16}$	17.1	5.03	1.17	5.25	2.25	1.02	1.65	2.28	1.38	.67
A 23	4 ×4	$\frac{5}{16}$	8.2	2.40	1.12	3.71	1.29	1.24	1.58	1.50	.95	.79
A 23	4 ×4	$\frac{3}{8}$	9.7	2.86	1.14	4.36	1.52	1.23	1.61	1.77	1.10	.79
A 23	4 ×4	$\frac{7}{16}$	11.2	3.31	1.16	4.97	1.75	1.23	1.64	2.02	1.23	.78
A 23	4 ×4	$\frac{1}{2}$	12.8	3.75	1.18	5.56	1.97	1.22	1.67	2.28	1.36	.78
A 23	4 ×4	$\frac{9}{16}$	14.2	4.18	1.21	6.12	2.19	1.21	1.71	2.52	1.48	.78
A 23	4 ×4	$\frac{5}{8}$	15.7	4.61	1.23	6.66	2.40	1.20	1.74	2.76	1.59	.77
A 23	4 ×4	$\frac{11}{16}$	17.1	5.03	1.25	7.17	2.61	1.19	1.77	3.00	1.70	.77
A 23	4 ×4	$\frac{3}{4}$	18.5	5.44	1.27	7.66	2.81	1.19	1.80	3.23	1.80	.77
A 23	4 ×4	$\frac{13}{16}$	19.9	5.84	1.29	8.14	3.01	1.18	1.83	3.46	1.89	.77
A 27	6 ×6	$\frac{7}{16}$	17.2	5.06	1.66	17.68	4.07	1.87	2.34	7.13	3.04	1.19
A 27	6 ×6	$\frac{1}{2}$	19.6	5.75	1.68	19.91	4.61	1.86	2.38	8.04	3.37	1.18
A 27	6 ×6	$\frac{9}{16}$	21.9	6.43	1.71	22.07	5.14	1.85	2.41	8.94	3.70	1.18
A 27	6 ×6	$\frac{5}{8}$	24.2	7.11	1.73	24.16	5.66	1.84	2.45	9.81	4.01	1.17
A 27	6 ×6	$\frac{11}{16}$	26.4	7.78	1.75	26.19	6.17	1.83	2.48	10.67	4.31	1.17
A 27	6 ×6	$\frac{3}{4}$	28.7	8.44	1.78	28.15	6.66	1.83	2.51	11.52	4.59	1.17
A 27	6 ×6	$\frac{13}{16}$	30.9	9.09	1.80	30.06	7.15	1.82	2.54	12.35	4.86	1.17
A 27	6 ×6	$\frac{7}{8}$	33.1	9.73	1.82	31.92	7.63	1.81	2.57	13.17	5.12	1.16

Column 9 contains the least radii of gyration for two angles back to back for all thicknesses of gusset plates.

PROPERTIES OF STANDARD ANGLES

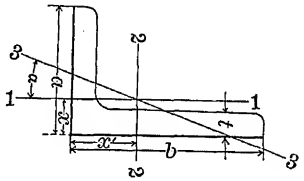

1	2	3	4	5	6	7	8
Section Number.	Dimensions.	Thickness.	Weight per Foot.	Area of of Section.	Distance of Centre of Gravity from Back of Longer Flange.	Moment of Inertia Axis 1-1.	Section Modulus. Axis 1-1.
	b x a	t		A	x	I	S
	Inches.	Inches.	Pounds.	Sq. In	Inches.	Inches.^{4}	Inches^3.
A 91	$2\frac{1}{2}\times2$	$\frac{3}{16}$	2.8	.81	.51	.29	.20
A 91	$2\frac{1}{2}\times2$	$\frac{1}{4}$	3.6	1.06	.54	.37	.25
A 91	$2\frac{1}{2}\times2$	$\frac{5}{16}$	4.5	1.31	.56	.45	.31
A 91	$2\frac{1}{2}\times2$	$\frac{3}{8}$	5.3	1.55	.58	.51	.36
A 91	$2\frac{1}{2}\times2$	$\frac{7}{16}$	6.0	1.78	.60	.58	.41
A 91	$2\frac{1}{2}\times2$	$\frac{1}{2}$	6.8	2.00	.63	.64	.46
A 93	$3\times2\frac{1}{2}$	$\frac{1}{4}$	4.5	1.31	.66	.74	.40
A 93	$3\times2\frac{1}{2}$	$\frac{5}{16}$	5.5	1.62	.68	.90	.49
A 93	$3\times2\frac{1}{2}$	$\frac{3}{8}$	6.5	1.92	.71	1.04	.58
A 93	$3\times2\frac{1}{2}$	$\frac{7}{16}$	7.5	2.21	.73	1.18	.66
A 93	$3\times2\frac{1}{2}$	$\frac{1}{2}$	8.5	2.50	.75	1.30	.74
A 93	$3\times2\frac{1}{2}$	$\frac{9}{16}$	9.4	2.78	.77	1.42	.82
A 95	$3\frac{1}{2}\times2\frac{1}{2}$	$\frac{1}{4}$	4.9	1.44	.61	.78	.41
A 95	$3\frac{1}{2}\times2\frac{1}{2}$	$\frac{5}{16}$	6.0	1.78	.64	.94	.50
A 95	$3\frac{1}{2}\times2\frac{1}{2}$	$\frac{3}{8}$	7.2	2.11	.66	1.09	.59
A 95	$3\frac{1}{2}\times2\frac{1}{2}$	$\frac{7}{16}$	8.3	2.43	.68	1.23	.68
A 95	$3\frac{1}{2}\times2\frac{1}{2}$	$\frac{1}{2}$	9.4	2.75	.70	1.36	.76
A 95	$3\frac{1}{2}\times2\frac{1}{2}$	$\frac{9}{16}$	10.4	3.06	.73	1.49	.84
A 95	$3\frac{1}{2}\times2\frac{1}{2}$	$\frac{5}{8}$	11.4	3.36	.75	1.61	.92
A 95	$3\frac{1}{2}\times2\frac{1}{2}$	$\frac{11}{16}$	12.4	3.65	.77	1.72	.99
A 97	$3\frac{1}{2}\times3$	$\frac{5}{16}$	6.6	1.93	.81	1.58	.72
A 97	$3\frac{1}{2}\times3$	$\frac{3}{8}$	7.8	2.30	.83	1.85	.85
A 97	$3\frac{1}{2}\times3$	$\frac{7}{16}$	9.0	2.65	.85	2.09	.98
A 97	$3\frac{1}{2}\times3$	$\frac{1}{2}$	10.2	3.00	.88	2.33	1.10
A 97	$3\frac{1}{2}\times3$	$\frac{9}{16}$	11.4	3.34	.90	2.55	1.21

B4

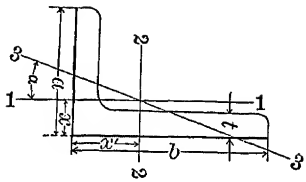

9	10	11	12	13	14	15	1
Radius of Gyration Axis 1-1.	Distance of Centre of Gravity from Back of Shorter Flange.	Moment of Inertia Axis 2-2.	Section Modulus Axis 2-2.	Radius of Gyration Axis 2-2.	Tangent of Angle α	Least Radius of Gyration Axis 3-3.	Section Number.
r	x'	I'	S'	r'		r''	
Inches.	Inches.	Inches.^{4}	Inches.^{3}	Inches.		Inches.	
.60	.76	.51	.29	.79	.632	.43	A 91
.59	.79	.65	.38	.78	.626	.42	A 91
.58	.81	.79	.47	.78	.620	.42	A 91
.58	.83	.91	.55	.77	.614	.42	A 91
.57	.85	1.03	.62	.76	.607	.42	A 91
.56	.88	1.14	.70	.75	.600	.42	A 91
.75	.91	1.17	.56	.95	.684	.53	A 93
.74	.93	1.42	.69	.94	.680	.53	A 93
.74	.96	1.66	.81	.93	.676	.52	A 93
.73	.98	1.88	.93	.92	.672	.52	A 93
.72	1.00	2.08	1.04	.91	.666	.52	A 93
.72	1.02	2.28	1.15	.91	.661	.52	A 93
.74	1.11	1.80	.75	1.12	.506	.54	A 95
.73	1.14	2.19	.93	1.11	.501	.54	A 95
.72	1.16	2.56	1.09	1.10	.496	.54	A 95
.71	1.18	2.91	1.26	1.09	.491	.54	A 95
.70	1.20	3.24	1.41	1.09	.486	.53	A 95
.70	1.23	3.55	1.56	1.08	.480	.53	A 95
.69	1.25	3.85	1.71	1.07	.472	.53	A 95
.69	1.27	4.13	1.85	1.06	.468	.53	A 95
.90	1.06	2.33	.95	1.10	.724	.63	A 97
.90	1.08	2.72	1.13	1.09	.721	.62	A 97
.89	1.10	3.10	1.29	1.08	.718	.62	A 97
.88	1.13	3.45	1.45	1.07	.714	.62	A 97
.87	1.15	3.79	1.61	1.07	.711	.62	A 97

Column 9 contains the least radii of gyration for two angles with short legs, back to back for all thicknesses of gusset plates.

TABLE XII—*Continued.*

PROPERTIES OF STANDARD ANGLES.

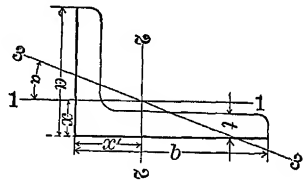

1	2	3	4	5	6	7	8
Section Number.	Dimensions.	Thickness.	Weight per Foot.	Area of Section.	Distance of Centre of Gravity from Back of Longer Flange.	Moment of Inertia Axis 1-1.	Section Modulus. Axis 1-1.
	b x a	t		A	x	I	S
	Inches.	Inches.	Pounds.	Sq. In.	Inches.	Inches.^{4}	Inches^3.
A 97	$3\frac{1}{2}\times3$	$\frac{5}{8}$	12.5	3.67	.92	2.76	1.33
A 97	$3\frac{1}{2}\times3$	$\frac{11}{16}$	13.6	4.00	.94	2.96	1.44
A 97	$3\frac{1}{2}\times3$	$\frac{3}{4}$	14.7	4.31	.96	3.15	1.54
A 97	$3\frac{1}{2}\times3$	$\frac{13}{16}$	15.7	4.62	.98	3.33	1.65
A 99	4×3	$\frac{5}{16}$	7.1	2.09	.76	1.65	.73
A 99	4×3	$\frac{3}{8}$	8.5	2.48	.78	1.92	.87
A 99	4×3	$\frac{7}{16}$	9.8	2.87	.80	2.18	.99
A 99	4×3	$\frac{1}{2}$	11.1	3.25	.83	2.42	1.12
A 99	4×3	$\frac{9}{16}$	12.3	3.62	.85	2.66	1.23
A 99	4×3	$\frac{5}{8}$	13.6	3.98	.87	2.87	1.35
A 99	4×3	$\frac{11}{16}$	14.8	4.34	.89	3.08	1.46
A 99	4×3	$\frac{3}{4}$	15.9	4.69	.92	3.28	1.57
A 99	4×3	$\frac{13}{16}$	17.1	5.03	.94	3.47	1.68
A 101	5×3	$\frac{5}{16}$	8.2	2.40	.68	1.75	.75
A 101	5×3	$\frac{3}{8}$	9.7	2.86	.70	2.04	.89
A 101	5×3	$\frac{7}{16}$	11.3	3.31	.73	2.32	1.02
A 101	5×3	$\frac{1}{2}$	12.8	3.75	.75	2.58	1.15
A 101	5×3	$\frac{9}{16}$	14.2	4.18	.77	2.83	1.27
A 101	5×3	$\frac{5}{8}$	15.7	4.61	.80	3.06	1.39
A 101	5×3	$\frac{11}{16}$	17.1	5.03	.82	3.29	1.51
A 101	5×3	$\frac{3}{4}$	18.5	5.44	.84	3.51	1.62
A 101	5×3	$\frac{13}{16}$	19.9	5.84	.86	3.71	1.74
A 103	$5\times3\frac{1}{2}$	$\frac{3}{8}$	10.4	3.05	.86	3.18	1.21
A 103	$5\times3\frac{1}{2}$	$\frac{7}{16}$	12.0	3.53	.88	3.63	1.39
A 103	$5\times3\frac{1}{2}$	$\frac{1}{2}$	13.6	4.00	.91	4.05	1.56
A 103	$5\times3\frac{1}{2}$	$\frac{9}{16}$	15.2	4.46	.93	4.45	1.73
A 103	$5\times3\frac{1}{2}$	$\frac{5}{8}$	16.7	4.92	.95	4.83	1.90
A 103	$5\times3\frac{1}{2}$	$\frac{11}{16}$	18.3	5.37	.97	5.20	2.06
A 103	$5+3\frac{1}{2}$	$\frac{3}{4}$	19.8	5.81	1.00	5.55	2.22
A 103	$5\times3\frac{1}{2}$	$\frac{13}{16}$	21.2	6.25	1.02	5.89	2.37
A 103	$5\times3\frac{1}{2}$	$\frac{7}{8}$	22.7	6.67	1.04	6.21	2.52

TABLE XII—*Continued.*

PROPERTIES OF STANDARD ANGLES.

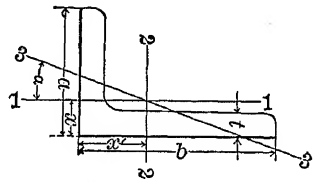

9	10	11	12	13	14	15	1
Radius of Gyration Axis 1-1.	Distance of Centre of Gravity from Back of Shorter Flange.	Moment of Inertia. Axis 2-2.	Section Modulus Axis 2-2.	Radius of Gyration Axis 2-2.	Tangent of Angle α	Least Radius of Gyration Axis 3-3.	Section Number.
r	x'	I'	S'	r'		r''	
Inches.	Inches.	Inches.^{4}	Inches.^{3}	Inches.		Inches.	
.87	1.17	4.11	1.76	1.06	.707	.62	A 97
.86	1.19	4.41	1.91	1.05	.703	.62	A 97
.85	1.21	4.70	2.05	1.04	.698	.62	A 97
.85	1.23	4.98	2.20	1.04	.694	.62	A 97
.89	1.26	3.38	1.23	1.27	.554	.65	A 99
.88	1.28	3.96	1.46	1.26	.551	.64	A 99
.87	1.30	4.52	1.68	1.25	.547	.64	A 99
.86	1.33	5.05	1.89	1.25	.543	.64	A 99
.86	1.35	5.55	2.09	1.24	.538	.64	A 99
.85	1.37	6.03	2.30	1.23	.534	.64	A 99
.84	1.39	6.49	2.49	1.22	.529	.64	A 99
.84	1.42	6.93	2.68	1.22	.524	.64	A 99
.83	1.44	7.35	2.87	1.21	.518	.64	A 99
.85	1.68	6.26	1.89	1.61	.368	.66	A 101
.84	1.70	7.37	2.24	1.61	.364	.65	A 101
.84	1.73	8.43	2.58	1.60	.361	.65	A 101
.83	1.75	9.45	2.91	1.59	.357	.65	A 101
.82	1.77	10.43	3.23	1.58	.353	.65	A 101
.82	1.80	11.37	3.55	1.57	.349	.64	A 101
.81	1.82	12.28	3.86	1.56	.345	.64	A 101
.80	1.84	13.15	4.16	1.55	.340	.64	A 101
.80	1.86	13.98	4.46	1.55	.336	.64	A 101
1.02	1.61	7.78	2.29	1.60	.485	.76	A 103
1.01	1.63	8.90	2.64	1.59	.482	.76	A 103
1.01	1.66	9.99	2.99	1.58	.479	.75	A 103
1.00	1.68	11.03	3.32	1.57	.476	.75	A 103
.99	1.70	12.03	3.65	1.56	.472	.75	A 103
.98	1.72	12.99	3.97	1.56	.468	.75	A 103
.98	1.75	13.92	4.28	1.55	.464	.75	A 103
.97	1.77	14.81	4.58	1.54	.460	.75	A 103
.96	1.79	15.67	4.88	1.53	.455	.75	A 103

Column 9 contains the least radii of gyration for two angles with short legs back to back for all thicknesses of gusset-plates.

Table XII—*Continued.*

PROPERTIES OF STANDARD ANGLES.

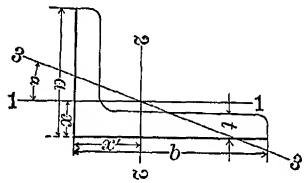

1	2	3	4	5	6	7	8
Section Number.	Dimensions.	Thickness.	Weight per Foot.	Area of Section.	Distance of Centre of Gravity from Back of Longer Flange.	Moment of Inertia Axix 1-1.	Section Modulus Axis 1-1.
	b x a	t		A	x	I	S
	Inches.	Inches.	Pounds.	Sq. In.	Inches.	Inches.^{4}	Inches.^{3}
A 105	6 × 3½	⅜	11.6	3.42	.79	3.34	1.23
A 105	6 × 3½	7/16	13.5	3.96	.81	3.81	1.41
A 105	6 × 3½	½	15.3	4.50	.83	4.25	1.59
A 105	6 × 3½	9/16	17.1	5.03	.86	4.67	1.77
A 105	6 × 3½	⅝	18.9	5.55	.88	5.08	1.94
A 105	6 × 3½	11/16	20.6	6.06	.90	5.47	2.11
A 105	6 × 3½	¾	22.3	6.56	.93	5.84	2.27
A 105	6 × 3½	13/16	24.0	7.06	.95	6.20	2.43
A 105	6 × 3½	⅞	25.7	7.55	.97	6.55	2.59
A 107	6 × 4	⅜	12.3	3.61	.94	4.90	1.60
A 107	6 × 4	7/16	14.2	4.18	.96	5.60	1.85
A 107	6 × 4	½	16.2	4.75	.99	6.27	2.08
A 107	6 × 4	9/16	18.1	5.31	1.01	6.91	2.31
A 107	6 × 4	⅝	19.9	5.86	1.03	7.52	2.54
A 107	6 × 4	11/16	21.8	6.40	1.06	8.11	2.76
A 107	6 × 4	¾	23.6	6.94	1.08	8.68	2.97
A 107	6 × 4	13/16	25.4	7.46	1.10	9.23	3.18
A 107	6 × 4	⅞	27.2	7.98	1.12	9.75	3.39

TABLE XII—*Continued.*

PROPERTIES OF STANDARD ANGLES.

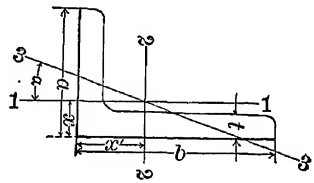

9	10	11	12	13	14	15	1
Radius of Gyration Axis 1-1.	Distance of Centre of Gravity from Back of Shorter Flange.	Moment of Inertia Axis 2-2.	Section Modulus Axis 2-2.	Radius of Gyration Axis 2-2.	Tangent of Angle α	Least Radius of Gyration. Axis 3-3.	Section Number.
r	x′	I′	S′	r′		r″	
Inches.	Inches.	Inches.[4]	Inches.[3]	Inches.		Inches.	
.99	2.04	12.86	3.24	1.94	.350	.77	A 105
.98	2.06	14.76	3.75	1.93	.347	.76	A 105
.97	2.08	16.59	4.24	1.92	.344	.76	A 105
.96	2.11	18.37	4.72	1.91	.341	.75	A 105
.96	2.13	20.08	5.19	1.90	.338	.75	A 105
.95	2.15	21.74	5.65	1.89	.334	.75	A 105
.94	2.18	23.34	6.10	1.89	.331	.75	A 105
.94	2.20	24.89	6.55	1.88	.327	.75	A 105
.93	2.22	26.39	6.98	1.87	.323	.75	A 105
1.17	1.94	13.47	3.32	1.93	.446	.88	A 107
1.16	1.96	15.46	3.83	1.92	.443	.87	A 107
1.15	1.99	17.40	4.33	1.91	.440	.87	A 107
1.14	2.01	19.26	4.83	1.90	.438	.87	A 107
1.13	2.03	21.07	5.31	1.90	.434	.86	A 107
1.13	2.06	22.82	5.78	1.89	.431	.86	A 107
1.12	2.08	24.51	6.25	1.88	.428	.86	A 107
1.11	2.10	26.15	6.75	1.87	.425	.86	A 107
1.11	2.12	27.73	7.15	1.86	.421	.86	A 107

Column 9 contains the least radii of gyration for two angles with short legs back to back for all thicknesses of gusset-plates.

Table XIII.

LEAST RADII OF GYRATION FOR TWO ANGLES WITH UNEQUAL LEGS, LONG LEGS BACK TO BACK.

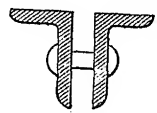

Dimensions, Inches.	Thickness, Inches.	Area of Two Angles, Square Inches.	Least Radii of Gyration for Distances Back to Back.			Least Radius of Gyration for one Angle.
			0 Inch.	$\frac{3}{8}$ Inch.	$\frac{3}{4}$ Inch.	
$2\frac{1}{2}\times2$	$\frac{3}{16}$	1.62	0.79	0.79	0.79	0.43
$2\frac{1}{2}\times2$	$\frac{3}{8}$	3.09	0.77	0.77	0.77	0.42
$2\frac{1}{2}\times2$	$\frac{1}{2}$	4.00	0.75	0.75	0.75	0.42
$3\times2\frac{1}{2}$	$\frac{1}{4}$	2.63	0.95	0.95	0.95	0.53
$3\times2\frac{1}{2}$	$\frac{3}{8}$	3.84	0.93	0.93	0.93	0.52
$3\times2\frac{1}{2}$	$\frac{9}{16}$	5.55	0.91	0.91	0.91	0.52
$3\frac{1}{2}\times2\frac{1}{2}$	$\frac{1}{4}$	2.88	0.96	1.09	1.12	0.54
$3\frac{1}{2}\times2\frac{1}{2}$	$\frac{1}{2}$	5.50	1.00	1.09	1.09	0.53
$3\frac{1}{2}\times2\frac{1}{2}$	$\frac{11}{16}$	7.30	1.03	1.06	1.06	0.53
$3\frac{1}{2}\times3$	$\frac{5}{16}$	3.87	1.10	1.10	1.10	0.63
$3\frac{1}{2}\times3$	$\frac{9}{16}$	6.68	1.07	1.07	1.07	0.62
$3\frac{1}{2}\times3$	$\frac{13}{16}$	9.24	1.04	1.04	1.04	0.62
4×3	$\frac{5}{16}$	4.18	1.17	1.27	1.27	0.65
4×3	$\frac{9}{16}$	7.24	1.21	1.24	1.24	0.64
4×3	$\frac{13}{16}$	10.05	1.21	1.21	1.21	0.64
5×3	$\frac{6}{16}$	4.80	1.09	1.22	1.36	0.66
5×3	$\frac{9}{16}$	8.37	1.13	1.26	1.41	0.65
5×3	$\frac{13}{16}$	11.68	1.17	1.32	1.47	0.64
$5\times3\frac{1}{2}$	$\frac{3}{8}$	6.09	1.34	1.46	1.60	0.76
$5\times3\frac{1}{2}$	$\frac{5}{8}$	9.84	1.37	1.51	1.56	0.75
$5\times3\frac{1}{2}$	$\frac{7}{8}$	13.34	1.42	1.53	1.53	0.75
$6\times3\frac{1}{2}$	$\frac{3}{8}$	6.84	1.26	1.39	1.53	0.77
$6\times3\frac{1}{2}$	$\frac{5}{8}$	11.09	1.30	1.43	1.58	0.75
$6\times3\frac{1}{2}$	$\frac{7}{8}$	15.09	1.34	1.49	1.64	0.75
6×4	$\frac{3}{8}$	7.22	1.50	1.62	1.76	0.88
6×4	$\frac{5}{8}$	11.72	1.53	1.67	1.81	0.86
6×4	$\frac{7}{8}$	15.97	1.58	1.68	1.86	0.86

Table XIV.

PROPERTIES OF T BARS.

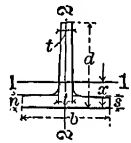

Equal Legs.

1	2	3	4	5	6	7	8
	Dimensions.						
Section Number.	Width of Flange.	Depth of Bar.	Thickness of Flange.	Thickness of Stem.	Weight per Foot.	Area of Section.	Dist. Cent. of Gravity from Outside of Flange.
	b	d	s to n′	t to t_1		A	x
	Inches.	Inches.	Inches.	Inches.	Pounds.	Sq. Ins.	Inches.
T 5	1	1	$\frac{1}{8}$ to $\frac{5}{32}$	$\frac{1}{8}$ to $\frac{5}{32}$	.89	.26	.29
T 181	$1\frac{1}{8}$	$1\frac{1}{8}$	$\frac{3}{16}$ " $\frac{7}{32}$	$\frac{5}{32}$ " $\frac{7}{32}$	1.39	.41	.33
T 183	$1\frac{3}{16}$	$1\frac{3}{16}$	$\frac{3}{16}$ " $\frac{1}{4}$	$\frac{5}{32}$ " $\frac{7}{32}$	1.53	.45	.34
T 187	$1\frac{1}{4}$	$1\frac{1}{4}$	$\frac{3}{16}$ " $\frac{1}{4}$	$\frac{5}{32}$ " $\frac{1}{4}$	1.61	.47	.36
T 189	$1\frac{3}{8}$	$1\frac{3}{8}$	$\frac{3}{16}$ " $\frac{1}{4}$	$\frac{5}{32}$ " $\frac{1}{4}$	1.85	.54	.39
T 37	2	2	$\frac{1}{4}$ " $\frac{5}{16}$	$\frac{1}{4}$ " $\frac{5}{16}$	3.7	1.05	.59
T 39	2	2	$\frac{5}{16}$ " $\frac{3}{8}$	$\frac{5}{16}$ " $\frac{3}{8}$	4.3	1.26	.61
T 41	$2\frac{1}{4}$	$2\frac{1}{4}$	$\frac{1}{4}$ " $\frac{5}{16}$	$\frac{1}{4}$ " $\frac{5}{16}$	4.1	1.19	.68
T 69	3	3	$\frac{3}{8}$ " $\frac{7}{16}$	$\frac{3}{8}$ " $\frac{7}{16}$	7.8	2.27	.88
T 97	$3\frac{1}{2}$	$3\frac{1}{2}$	$\frac{3}{8}$ " $\frac{7}{16}$	$\frac{3}{8}$ " $\frac{7}{16}$	9.3	2.74	.99
			Unequal Legs.				
T 185	$1\frac{1}{4}$	$1\frac{1}{16}$	$\frac{3}{16}$ " $\frac{1}{4}$	$\frac{5}{32}$ " $\frac{7}{32}$	1.49	.44	.29
T 65	3	$2\frac{1}{2}$	$\frac{3}{8}$ " $\frac{7}{16}$	$\frac{3}{8}$ " $\frac{7}{16}$	7.2	2.07	.71
T 101	$3\frac{1}{2}$	4	$\frac{3}{8}$ " $\frac{7}{16}$	$\frac{3}{8}$ " $\frac{7}{16}$	9.9	2.91	1.20

Table XIV—*Continued.*

PROPERTIES OF T BARS.

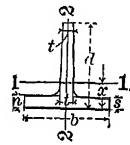

Equal Legs—(Continued).

1	9	10	11	12	13	14
Section Number.	Moment of Inertia Axis 1-1.	Section Modulus Axis 1-1.	Radius of Gyration Axis 1-1.	Moment of Inertia Axis 2-2.	Section Modulus Axis 2-2.	Radius of Gyration Axis 2-2.
	I	S	r	I′	S′	r′
	Inches⁴.	Inches³.	Inches.	Inches⁴.	Inches³.	Inches.
T 5	.02	.03	.30	.01	.02	.21
T 181	.04	.05	.32	.02	.04	.25
T 183	.05	.06	.33	.03	.05	.26
T 187	.06	.07	.35	.03	.05	.27
T 189	.08	.08	.39	.05	.07	.29
T 37	.37	.26	.59	.18	.18	.42
T 39	.43	.31	.59	.23	.23	.42
T 41	.51	.32	.65	.24	.22	.45
T 69	1.82	.86	.90	.92	.61	.64
T 97	3.1	1.23	1.08	1.42	.81	.73
Unequal Legs—(Continued).						
T 185	.04	.05	.29	.03	.01	.28
T 65	1.08	.60	.64	.90	.60	.28
T 101	4.3	1.54	1.23	1.42	.81	.70

TABLE XV.

STANDARD SIZES OF YELLOW PINE LUMBER AND CORRESPONDING AREAS AND SECTION MODULI.*

Nominal Size. b'	d'	Standard Size. b	d	Area A, Sq. In.	Section Modulus, $S=\frac{1}{6}bd^2$.	
2	6	$1\frac{5}{8}$	$5\frac{5}{8}$	9.1	8.57	Relative transverse strength of yellow pine
	8		$7\frac{1}{2}$	12.2	15.23	
	10		$9\frac{1}{2}$	15.4	24.44	Long-leaf..... 100
	12		$11\frac{1}{2}$	18.7	35.82	Cuban..... 110
	14		$13\frac{1}{2}$	21.9	49.36	Loblolly..... 92
	16		$15\frac{1}{2}$	25.2	65.03	Short-leaf..... 84
$2\frac{1}{2}$	6	$2\frac{1}{4}$	$5\frac{1}{2}$	12.4	11.34	Relative compressive strength of yellow pine. With the grain
	8		$7\frac{1}{2}$	16.9	21.10	
	10		$9\frac{1}{2}$	21.4	33.84	Long-leaf..... 100
	12		$11\frac{1}{2}$	25.9	49.60	Cuban..... 115
	14		$13\frac{1}{2}$	30.4	68.34	Loblolly..... 94
	16		$15\frac{1}{2}$	34.9	90.10	Short-leaf..... 86
3	6	$2\frac{3}{4}$	$5\frac{1}{2}$	15.1	13.86	Longitudinal shear at neutral axis
	8		$7\frac{1}{2}$	20.6	25.78	W = total safe uniformly distributed load on beam supported at ends
	10		$9\frac{1}{2}$	26.1	41.36	
	12		$11\frac{1}{2}$	31.6	60.60	
	14		$13\frac{1}{2}$	37.1	83.53	
	16		$15\frac{1}{2}$	42.6	110.11	
4	4	$3\frac{3}{4}$	$3\frac{3}{4}$	14.1	8.79	A = area of section of beam
	6		$5\frac{5}{8}$	21.1	19.77	f_s = safe intensity for longitudinal shear
	8		$7\frac{1}{2}$	28.1	35.16	$W=\frac{4}{3}Af_s$.
	10		$9\frac{1}{2}$	35.6	56.41	
	12		$11\frac{1}{2}$	43.1	82.66	
	14		$13\frac{1}{2}$	50.6	113.91	
	16		$15\frac{1}{2}$	58.1	150.16	

* Compiled from "A Manual of Standard Wood Construction," published by The Yellow Pine Manufacturers' Association, St. Louis, Mo.

TABLE XV—*Continued.*

Nominal Size. b'	d'	Standard Size. b	d	Area A, Sq. In.	Section modulus, $S = \frac{1}{6}bd^2$.	
6	6	5½	5½	30.3	27.70	Bending Moments. For a fiber stress of 1200 pounds per square inch the maximum bending moment in *foot*-pounds is 100S, where S = the section modulus
	8		7½	41.3	51.56	
	10		9½	52.3	82.73	
	12		11½	63.3	121.23	
	14		13½	74.3	167.10	
	16		15½	85.3	220.21	
	18		17½	96.3	280.73	
8	8	7½	7½	56.3	70.31	
	10		9½	71.3	112.81	
	12		11½	86.3	165.31	
	14		13½	101.3	227.81	
	16		15½	116.3	300.31	
10	10	9½	9½	90.3	142.89	
	12		11½	109.3	209.39	
	14		13½	128.3	288.56	
	16		15½	147.3	380.39	
12	12	11½	11½	132.3	253.48	
	14		13½	155.3	349.31	
	16		15½	178.3	460.48	
	18		17½	201.3	586.98	
14	14	13½	13½	182.3	410.06	
	16		15½	209.3	540.56	
	18		17½	236.3	689.06	
16	16	15½	15½	240.3	620.67	
	18		17½	271.3	791.14	

TABLE XVI.

AVERAGE SAFE ALLOWABLE WORKING UNIT STRESSES, IN POUNDS PER SQUARE INCH.

Recommended by the Committee on "Strength of Bridge and Trestle Timbers," Association of Railway Superintendents of Bridges and Buildings, Fifth Annual Convention, New Orleans, October, 1895, and modified in 1904.

Kind of Timber.	Tension.		Compression.			Transverse.		Shearing.	
	(1)	(2)	(3)	(4)	(5)	(6)	(7)	(8)	(9)
	With Grain.	Across Grain.	With Grain. End Bearing.	With Grain. Columns under 15 Diam.	Across Grain.	Extreme Fiber Stress.	Modulus of Elasticity.	With Grain.	Across Grain.
Factor of Safety.	Ten.	Ten.	Five.	Five.	Four.	Six.	Two.	Four.	Four.
White Oak	1200	200	1400	1000	500	1200	750000	200	1000
White Pine	700	50	1100	800	200	700	500000	100	500
Southern Long-leaf or Georgia Yellow Pine	1200	60	1400	1000	350	1200	750000	150	1250
Douglas, Oregon, and Yellow Fir	800	.....	1200	900	200	800	750000	130	
Washington Fir or Pine (Red Fir)	1000	.....	.....	.....	.....	800			
Northern or Short-leaf Yellow Pine	900	50	1100	800	250	1000	600000	100	1000
Red Pine	800	50	1000	750	200	800	565000		
Norway Pine	800	.....	1000	750	200	800	565000		
Canadian (Ottawa) White Pine	1000	.....	.....	1000	.....	.....	.....	100	
Canadian (Ontario) Red Pine	1000	.....	.....	1000	.....	800	700000	100	
Spruce and Eastern Fir	800	50	1200	800	200	700	600000	100	750
Hemlock	600	.....	1100	800	150	600	450000	100	600
Cypress	600	.....	1000	750	200	800	450000		
Cedar	700	.....	1100	750	200	700	350000	100	400
Chestnut	850	.....	.....	800	250	800	500000	150	500
California Redwood	700	.....	.....	800	150	750	350000	100	
California Spruce	.....	.....	.....	800	.....	800	600000		

Table XVII.

CAST-IRON WASHERS.

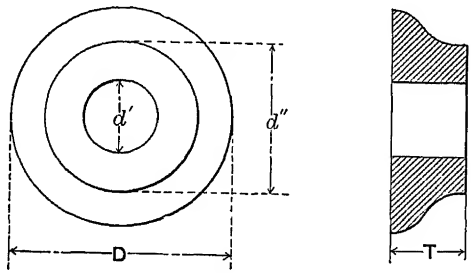

Diam. of bolt d. Inches.	D Inches.	d″ Inches.	d′ Inches.	T Inches.	Weight. Lbs.	Bearing Area. Sq. In.
$\frac{1}{2}$	$2\frac{5}{8}$	$1\frac{3}{4}$	$\frac{9}{16}$	$\frac{5}{8}$	$\frac{1}{2}$	5.16
$\frac{5}{8}$	3	$1\frac{7}{8}$	$\frac{11}{16}$	$\frac{3}{4}$	$\frac{3}{4}$	6.69
$\frac{3}{4}$	$3\frac{1}{4}$	$2\frac{1}{8}$	$\frac{13}{16}$	$\frac{7}{8}$	$1\frac{1}{4}$	7.78
$\frac{7}{8}$	$3\frac{3}{4}$	$2\frac{1}{2}$	$\frac{15}{16}$	$\frac{7}{8}$	$1\frac{1}{2}$	10.35
1	4	$2\frac{3}{4}$	$1\frac{1}{16}$	$1\frac{1}{8}$	$2\frac{1}{2}$	11.68
$1\frac{1}{8}$	$4\frac{3}{4}$	$2\frac{3}{4}$	$1\frac{3}{16}$	$1\frac{1}{8}$	3	16.61
$1\frac{1}{4}$	6	3	$1\frac{5}{16}$	$1\frac{3}{8}$	$5\frac{3}{4}$	26.92
$1\frac{1}{2}$	$6\frac{1}{4}$	$3\frac{1}{4}$	$1\frac{5}{8}$	$1\frac{1}{2}$	6	28.61
$1\frac{3}{4}$	$7\frac{1}{4}$	$3\frac{3}{4}$	$1\frac{7}{8}$	$1\frac{3}{4}$	$9\frac{1}{2}$	38.52
2	$8\frac{1}{4}$	$4\frac{1}{4}$	$2\frac{1}{8}$	2	$17\frac{1}{4}$	49.91
$2\frac{1}{4}$	$9\frac{1}{4}$	$4\frac{3}{4}$	$2\frac{3}{8}$	$2\frac{1}{4}$	20	62.77
$2\frac{1}{2}$	$10\frac{1}{4}$	$5\frac{1}{4}$	$2\frac{5}{8}$	$2\frac{1}{2}$	$27\frac{1}{4}$	77.11
$2\frac{3}{4}$	$11\frac{1}{4}$	$5\frac{3}{4}$	$2\frac{7}{8}$	$2\frac{3}{4}$	36	92.91
3	$12\frac{1}{4}$	$6\frac{1}{4}$	$3\frac{1}{8}$	3	46	110.19

For sizes not given $D = 4d + \frac{1}{4}''$; $d'' = 2d + \frac{1}{4}$.
$d' = d + \frac{1}{8}$; $T = d$.

Table XVIII.

SAFE SHEARING AND TENSILE STRENGTH OF BOLTS.

Diam. of Bolt.	Gross Area.	Net Area.	Wrought Iron.		Soft Steel.	
			Single Shear 7500 lbs. per Sq. In.	Tension 12000 lbs. per Sq. In.	Single Shear 10000 lbs. per Sq. In.	Tension 16000 lbs. per Sq. In.
Inch.	Square Inch.	Square Inch.				
$\frac{1}{2}$	0.196	0.126	1470	1510	1960	2020
$\frac{5}{8}$	0.307	0.202	2300	2420	3070	3230
$\frac{3}{4}$	0.442	0.302	3320	3620	4420	4830
$\frac{7}{8}$	0.601	0.420	4510	5040	6010	6720
1	0.785	0.550	5890	6600	7850	8800
$1\frac{1}{8}$	0.994	0.694	7460	8330	9940	11100
$1\frac{1}{4}$	1.227	0.893	9200	10720	12270	14290
$1\frac{3}{8}$	1.485	1.057	11140	12680	14850	16910
$1\frac{1}{2}$	1.767	1.295	13250	15540	17670	20720
$1\frac{3}{4}$	2.405	1.744	18040	20930	24050	27900
2	3.142	2.302	23560	27620	31420	36830
$2\frac{1}{4}$	3.976	3.023	29820	36280	39760	48370
$2\frac{1}{2}$	4.909	3.715	36820	44580	49090	59440
$2\frac{3}{4}$	5.940	4.619	44550	55430	59400	73900
3	7.069	5.428	53020	65140	70690	86850

APPENDIX.

1. Length of Keys, Spacing of Notches and Spacing of Bolts.—Let p = the end bearing intensity, q = the bearing intensity across the grain, and s = the intensity in

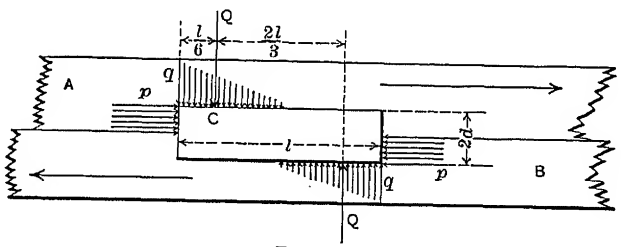

FIG. 1.

longitudinal shear for the key. Then the length of the key is $l = \frac{p}{s}d$, when end bearing and longitudinal shear are considered. As the key tends to rotate under the moment pd^2, cross bearing stresses are produced and the maximum intensity must not exceed q. The length of the key based on q is $l = d\sqrt{6\frac{p}{q}}$. This value of l is less than that found above for wooden keys, hence their length is controlled by end bearing and longitudinal shear intensities. Evidently square metal keys produce excessive

cross bearing intensities and should only be used when p is taken as $\frac{2}{3}q$. For given values of p and q the proper length of metal keys is found from the second formula given above.

Unless the pieces A and B are securely bolted together the rotation of the key will separate them. The rotating moment is $\frac{2}{3}Ql = pd^2$.

$$\therefore \quad Q = \frac{3}{2}\frac{pd^2}{l},$$

where l = the length of the key.

This value of Q assumes the dimension normal to the page as unity. If the piece B is assumed to be fixed, then a bolt at C passing through A, the key, and B will have a tensile stress of $\frac{3}{2}\frac{pd^2}{l}b$, where b is the width of the pieces and the key. The stress in the bolt for any other position is uncertain, but probably it will not be greatly in excess of the stress given by the above formula if placed anywhere in the key.

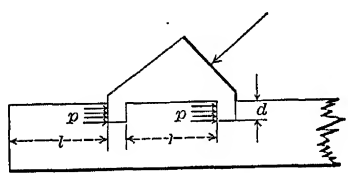

FIG. 1a.

For notches, as shown in Fig. 1a, the spacing is controlled by end bearing and longitudinal shear intensities and

$$l = \frac{p}{s}d.$$

The spacing of round bolts is somewhat difficult to determine accurately, owing to the splitting action. If this is neglected the spacing may be considered as depend-

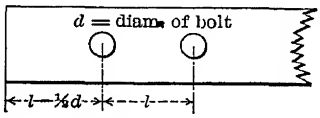

FIG. 1*b*.

ing upon the end bearing and longitudinal shear intensities for the wood. If p' is the end bearing intensity, then

$$l = \frac{1}{2}\frac{p'}{s}d.$$

As a matter of precaution the diameter of the bolt should be added to this length except at the end of the piece, where one-half the diameter may be added. Approximately, the spacing of bolts may be taken as four and one-half diameters of the bolts for hard woods and five times the diameters for soft woods.

Values of	Figs. 1 and 1*a*, $l = \frac{p}{s}d$.	Fig. 1*b*, $\frac{1}{2}\frac{p'}{s}d + d$.
White Oak	7.0*d*	3.75*d*
White Pine	11.0*d*	4.00*d*
Long-leaf Pine	9.3*d*	3.83*d*
Douglas Fir	9.2*d*	3.31*d*
Short-leaf Pine	11.0*d*	4.00*d*
Spruce	12.0*d*	4.00*d*

2. Plate Washers and Metal Hooks for Trusses of Wood.—Where a number of bolts are necessary, it is usually more

economical to use a single plate to transfer the stresses in the bolts to the wood than to use single cast-iron washers,

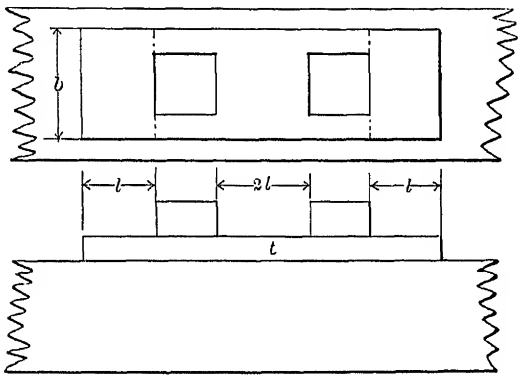

FIG. 2.

since the use of washers necessitates a wider spacing of bolts.

As a close approximation we may assume that the plate will have a tendency to bend along the dotted lines, and that the load producing this is the bearing value of the wood against which the plate bears.

If B is the safe bearing value for the wood and R the modulus of safe strength for the metal in bending, then

$$Bbl\left(\frac{l}{2}\right)=\frac{1}{6}Rbt^2, \quad \text{or} \quad l^2=\frac{R}{3B}t^2.$$

From which $$l=t\sqrt{\frac{R}{3B}}.$$

Assuming $R=16{,}000$ and the values of B as given in Table XVI, we obtain the following:

White Oak . . . . . $l=3.26t$
White Pine . . . . . $l=5.16t$
Long-leaf Southern Pine . . . . . $l=3.90t$

Douglas, Oregon, and Yellow Fir ..... $l=5.16t$
Northern or Short-leaf Yellow Pine ..... $l=4.62t$
Spruce and Eastern Fir ..... $l=5.16t$

Where plates are bent at right angles, forming a hook bearing against the end fibers of wood, the efficient depth of the notch will obtain when the total safe bearing upon

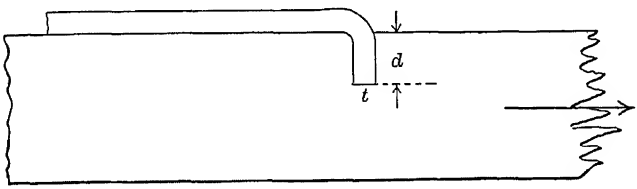

FIG. 2a.

the end fibers of the wood and the safe fiber stress in the metal plate are reached at the same time. Then, if 16,000 is the safe fiber stress for steel and B the safe end bearing for wood as given in Table XVI, the efficient depth of the notch can be found from the formula

$$d=t\sqrt{\frac{R}{3B}}.$$

The values of d are given below for different woods:

White Oak ..... $d=1.95t$
White Pine ..... $d=2.20t$
Long-leaf Southern Pine ..... $d=1.95t$
Douglas, Oregon, and Yellow Fir..... $d=2.11t$
Northern or Short-leaf Yellow Pine .... $d=2.20t$
Spruce and Eastern Fir ..... $d=2.11t$

Since in bending a plate the inside of the bend will be an arc of a circle having a radius of about $\frac{1}{2}t$, the depth

of the notch should be increased this amount, but the efficiency should be based upon the values of d given above.

3. A Graphical Solution of the Knee-brace Problem.—(First published in Railroad Gazette, May 18, 1906.) The actual stresses in knee-braces between columns and roof-trusses will probably never be known exactly, as there are

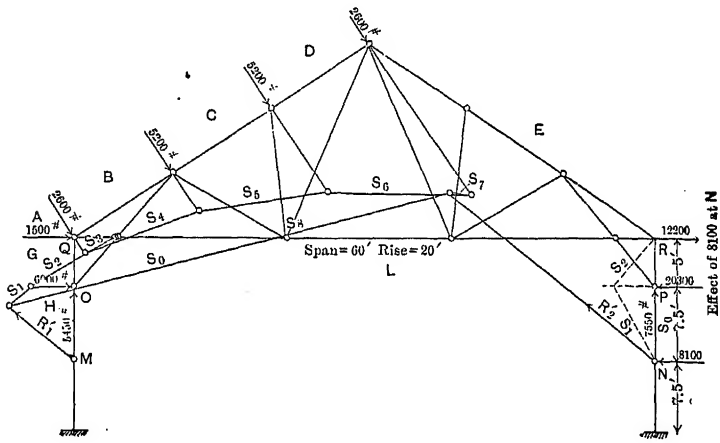

FIG. 3.

so many variable factors entering the question. In the usual construction, where columns are bolted to masonry pedestals at the bottom, either riveted or bolted to the trusses at the top, and with the knee-braces riveted at both ends, the degree to which these connections may be considered fixed is a question leading to many arguments and differences of opinion. It is not proposed to enter into this question at all, but to show how the stresses in all the members of the framework can be found graphically under a given assumption.

Assume, for example, that the bottom of the columns are sufficiently fixed, so that the point of zero moment is

midway between the bottom and the attachment of the knee-braces, and that the top attachments and those of the knee-braces to the columns such that they may be considered as pin-connections. Taking the truss and loading shown in Fig. 3, it is evident that the external forces must be in equilibrium, and, unless the points M and N are unlike in some particular, the reactions at these points will be parallel to the resultant of the given forces and the sum of the two reactions equal this resultant in magnitude. This is shown by HE, Fig. 3a, which represents the direc-

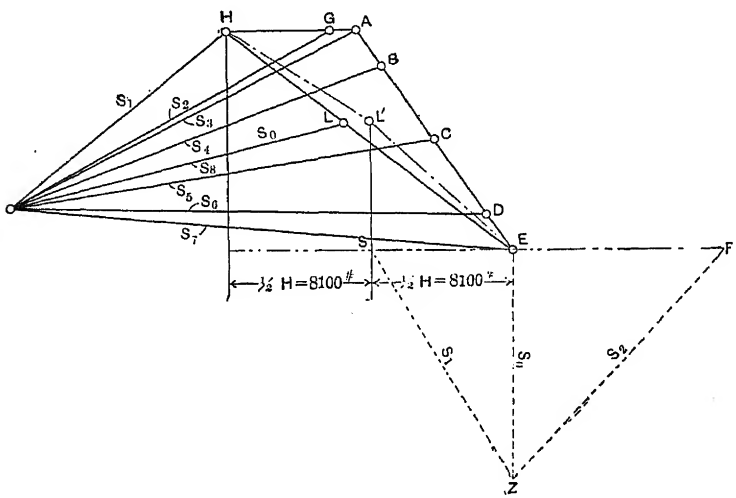

FIG. 3a.

tion and magnitude of the resultant of the given forces. Assume a convenient point as a pole, and construct an equilibrium polygon in the usual manner, and draw the string S_0, dividing HE into two parts at L. $HL = R_1' =$ the reaction at M, and $LE = R_2' =$ the reaction at N. These reactions are correct in direction and magnitude, unless some condition is imposed to change them.

If there are no bending moments at M and N and these points are prevented from moving vertically, the vertical components of the reactions must remain constant, even in the extreme case where M may be assumed as a pin and N as resting on rollers.

Any assumption may be made as to the horizontal reactions at these points, as long as their sum equals the horizontal component of HE, Fig. 3a. It is customary to assume these reactions as equal. If this is the case, then the reaction at M is HL' and that at N, $L'E$, as shown in Fig. 3a.

The next step is to find the effect of these reactions at the points O, Q, P, and R. The vertical components will

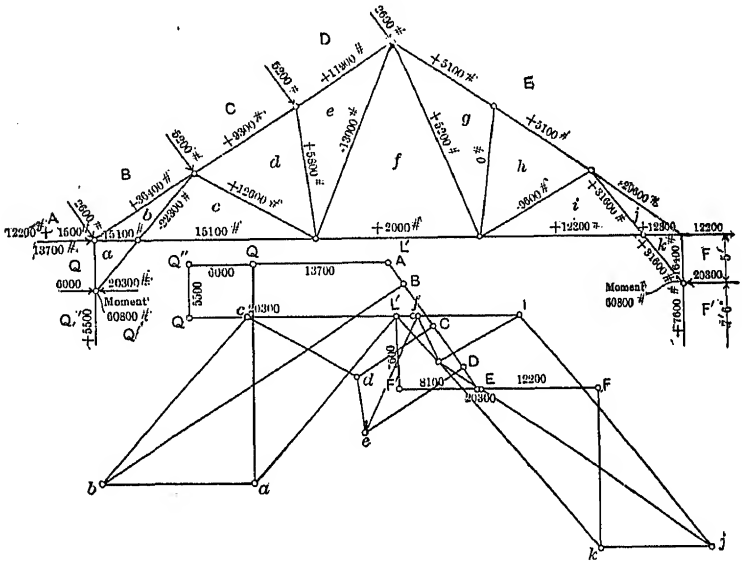

FIG. 3b.

act as vertical reactions at O and P. The horizontal components will produce bending moments at O and P, and,

in effect, horizontal forces at O, P, Q, and R. To determine these forces, in Fig. 3*a*, assume a pole vertically below E and draw the strings S_1 and S_0 from the extremities of the horizontal component as shown. Then, in Fig. 3, from N draw S_1 and S_0 in the usual manner, and *complete the equilibrium polygon* with S_2. In Fig. 3*a* draw ZF parallel to S_2 of Fig. 3, then SF is the force at P, and FE the force at R *produced by the action of the horizontal reaction at* N. The forces at O and Q are, of course, the same as found at P and R respectively. With these forces determined, the problem is solved in the usual manner, as shown in Fig. 3*b*.

4. Trusses which may have Inclined Reactions. — All trusses change in span under different loads, owing to the changes in length of the members under stress. Trusses with straight bottom chords do not change sufficiently to create any considerable horizontal thrust, but those having broken bottom chords, like the scissors-truss, often, when improperly designed, push their supports outward. This can be obviated by permitting one end of the truss to slide upon its support until fully loaded with the dead load, then the only horizontal thrust to be taken by the supports will be that due to wind and snow loads. Of course the horizontal component of the wind must be resisted by the supports in any case. A better way of providing for the horizontal thrust produced by vertical loads is to design the truss so that the change in the length of the span is so small that its effect may be neglected. This requires larger truss members than are sometimes used and care in making connections at the joints.

Let p = the stress per square inch in any member produced by a full load;

u = the stress in any member produced by a load of one pound acting at the left support and parallel to the plane of the support, usually horizontal;

l = the length center to center of any member (inches);

E = the modulus of elasticity of the material composing any member;

D = the total change in span produced by a full load.

Then $$D = \Sigma \frac{pul}{E}.*$$

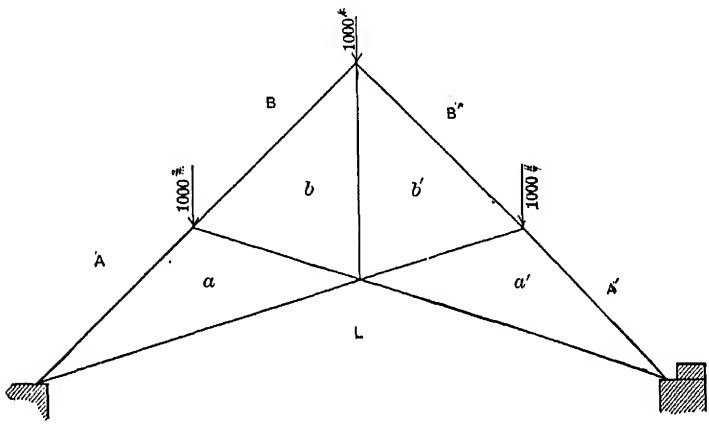

FIG. 4.

If S = the stress or horizontal force necessary to make D zero,

a = the area of any member in square inches,

$$S = \frac{D}{\Sigma \frac{u^2 l}{aE}}.$$

* Theory and Practice of Modern Framed Structures, Johnson, Bryan, Turneaure (John Wiley & Sons, N. Y.). Roofs and Bridges, Merriman and Jacoby (John Wiley & Sons, N. Y.).

To illustrate the use of these formulas we will take a simple scissors-truss having a span of 20 feet and a rise of 10 feet.

COMPUTATIONS FOR D AND S.

Piece.	Stress Produced by 1000-lb. Loads.	a, sq. in.	p, lbs.	u, lbs.	l, inches.	$\frac{pul}{E}$.	$\frac{u^2l}{aE}$.
Aa	+3160	36	87.8	+0.71	84.8	.00528	.00000118
Bb	+2100	36	58.3	+0.71	84.8	.00351	.00000118
ab	+ 800	36	22.2	0.00	63.2	.00000	0
aL	−2360	36	65.5	−1.58	126.5	.01316	.00000875
bb'	−1980	0.785	2522	−1.00	80.0	.00336	.00000170
						.02531	.00001281
						2	2
						.05062 D	.00002562

$$S = \frac{.05062}{.00002562} = 1975.$$

Let all members except bb' be made of long-leaf Southern pine $6'' \times 6''$, and bb' consist of a 1-inch round rod of steel upset at the ends. The value of E for the wood is 1,000,000 and for the steel 30,000,000.

Computing D and S, we find that the horizontal deflection is very small, being only about $\frac{1}{20}$ inch, and the force necessary to prevent this is about 2000 pounds.

In case the truss is arranged on the supports so that the span remains constant, the supports must be designed to resist a horizontal force of 2000 pounds. The actual stresses in the truss members will be the algebraic sum of the stresses produced by the vertical loads and the horizontal thrust.

An inspection of the computations for D shows that

the pieces aL and $a'L$ contribute over one half the total value of D. If the area of these pieces is increased to 64 square inches, the value of D is reduced about 25 per cent.

It is possible to design the truss so that the change of span is very small by simply adjusting the sizes of the truss members, increasing considerably those members whose distortion contributes much to the value of D.

The application of the above method to either wood or steel trusses of the scissors type enables the designer to avoid the quite common defect of leaning walls and sagging roofs.

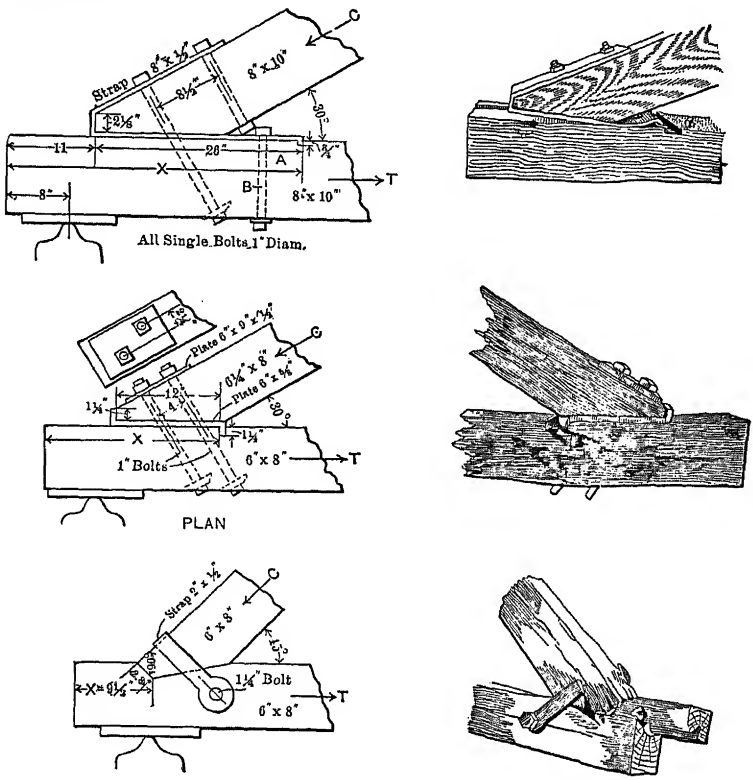

FIG 5.

5. Tests of Joints in Wooden Trusses.—In 1897 a series of tests was made at the Massachusetts Institute of Technology on full-sized joints. The results were published in the Technology Quarterly of September, 1897, and reviewed by Mr. F. E. Kidder in the Engineering Record of November 17, 1900.

The method of failure for three types of joints is shown in Fig. 5.

6. Examples of Details Employed in Practice.—The following illustrations have been selected from recent issues of the Engineering News, the Engineering Record, and The Railroad Gazette.

Fig. 6. A roundhouse roof-truss, showing the connection at the support with arrangement of brickwork, gutter, down-spouts, etc. The purlins are carried by metal stirrups hanging over the top chord of the truss.

Fig. 6*a*. Details of a Howe truss, showing angle-blocks and top- and bottom-chord splices.

Fig. 6*b*. A common form of roof-truss, showing detail at support. The diagonals are let into the chords. The purlins stand vertical and rest on top of the truss top chord.

Fig. 6*c*. A comparatively large roof-truss of the Pratt type of bracing, showing details of many joints. A large number of special castings appear in this truss.

Fig. 6*d*. Howe truss details, showing connection to wooden column, knee-brace bolster, cast-iron angle-block, and brace-connection details.

Fig. 6*e*. Scissors-trusses, showing five forms in use, and also three details which have been used by Mr. F. E. Kidder.

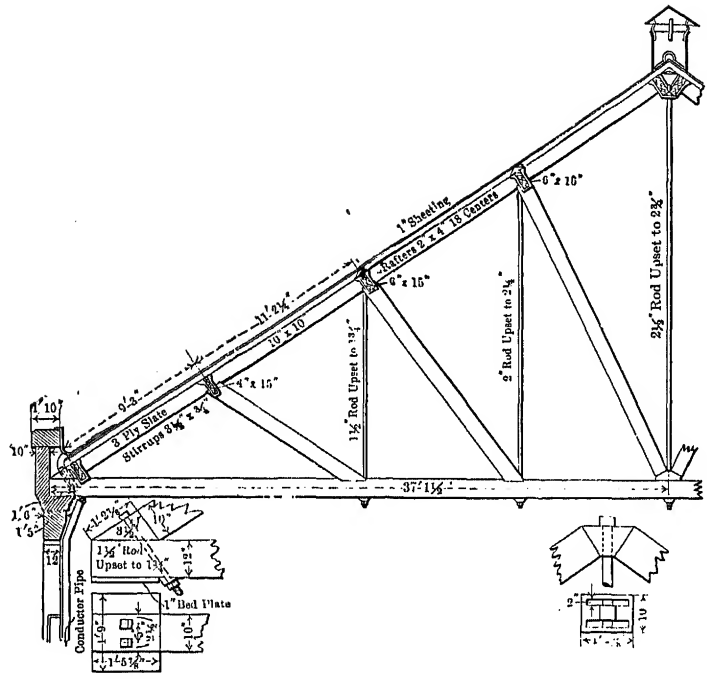

FIG. 6.—Roundhouse Roof, Urbana Shops, Peoria and Eastern R.R.

Fig. 6*f*. A steel roof-truss, showing details. The purlins are supported by shelf-angles on the gusset-plates extended. The principal members of the web system have both legs of the angles attached to the gusset-plates.

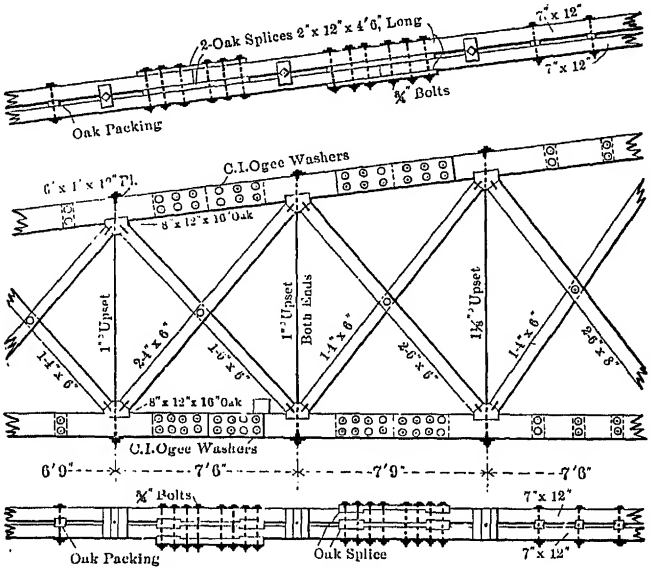

CHORD DETAILS, PLANING MILL ROOF TRUSS.

FIG. 6*a*.—Canadian Pacific R.R., Montreal.

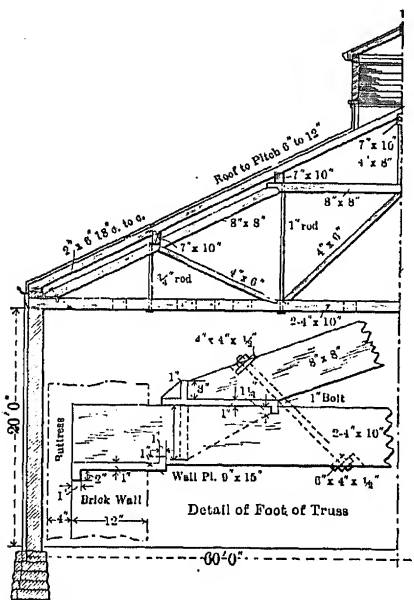

HALF SECTION OF BLACKSMITH SHOP.

FIG. 6*b*.—Boston and Maine R.R., Concord, N. H.

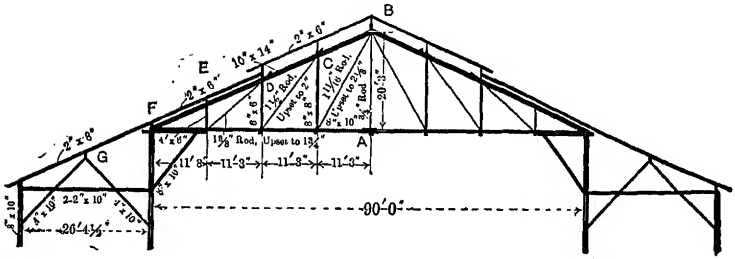

Outline of Main Truss of Forestry Building.

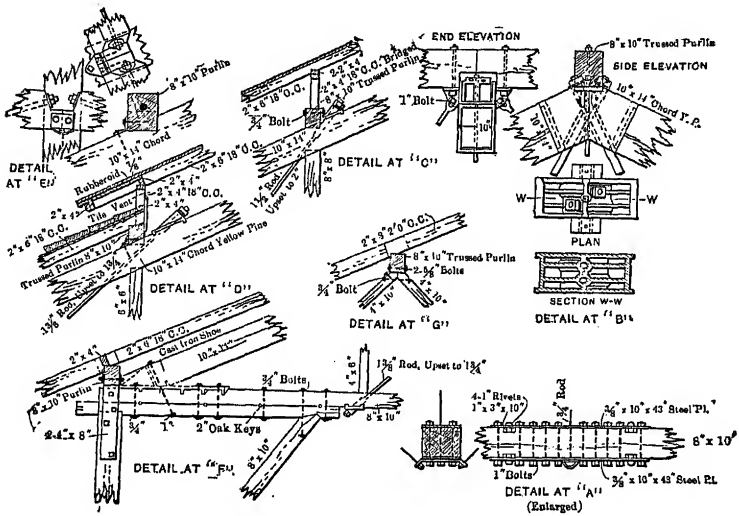

FIG. 6c.—Details of Truss Framing in Forestry Building, Pan-American Exposition.

Fig. 6g. A steel roof-truss with a heavy bottom chord. The exceptional feature in this truss is the use of flats for web tension members.

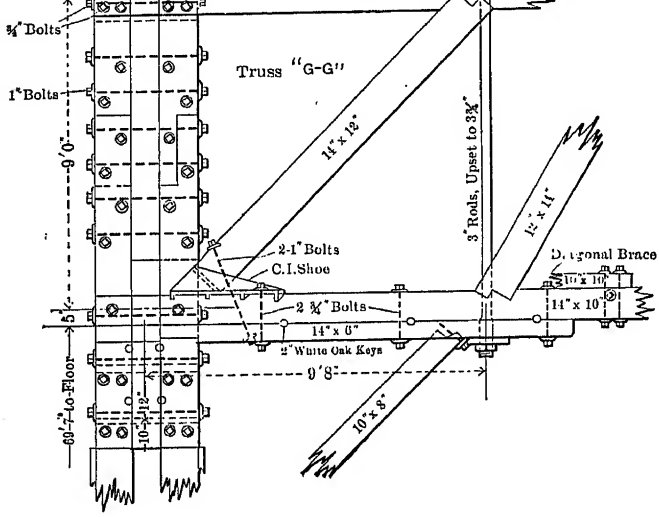

FIG. 6*d*.—Howe Truss, Horticultural Building, Pan-American Exposition.

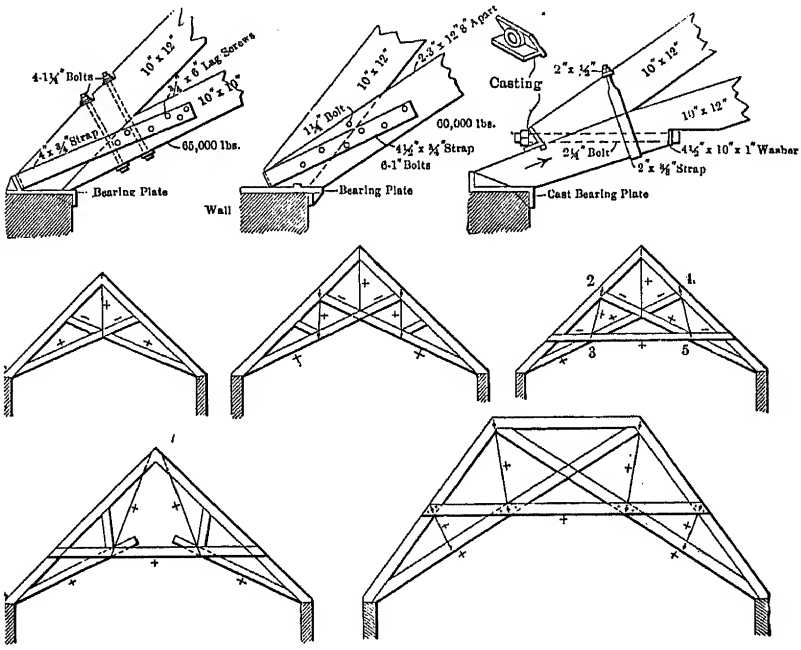

FIG. 6*e*.—Scissors-trusses and Details Used by Mr. F. E. Kidder.

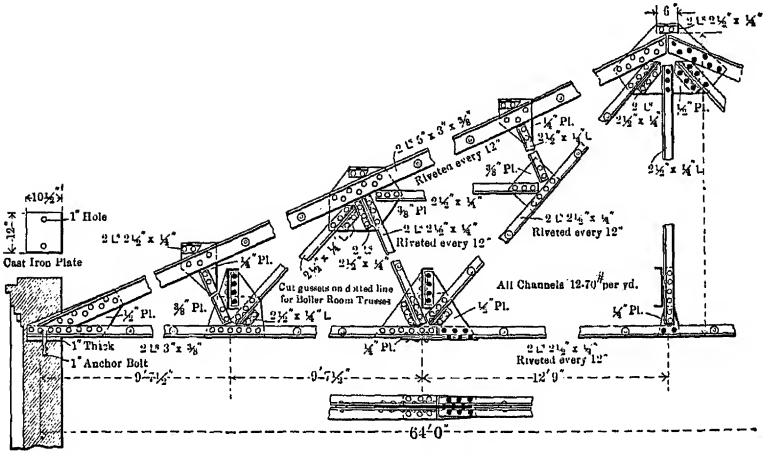

FIG. 6*f*.—Roof-truss of Power-house, Boston and Maine R.R., Concord, N. H.

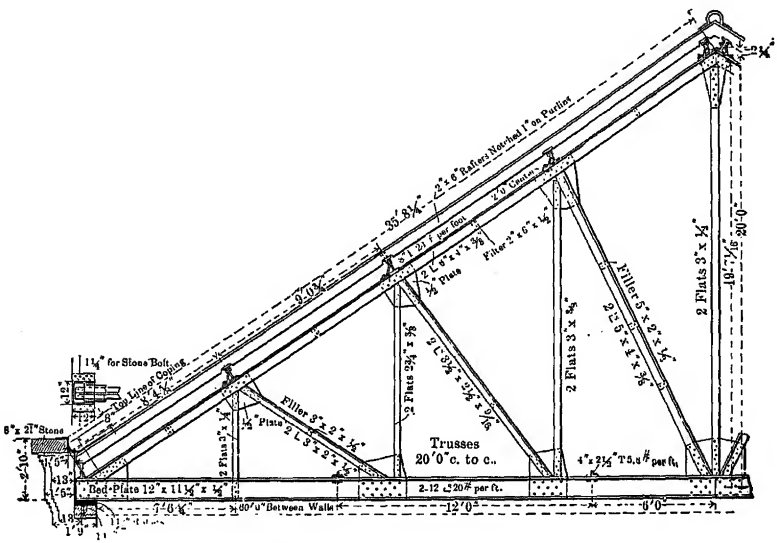

FIG. 6*g*.—Roof-truss, Peoria and Eastern R.R., Urbana.

Fig. 6*h*. A light steel roof-truss, showing arrangement

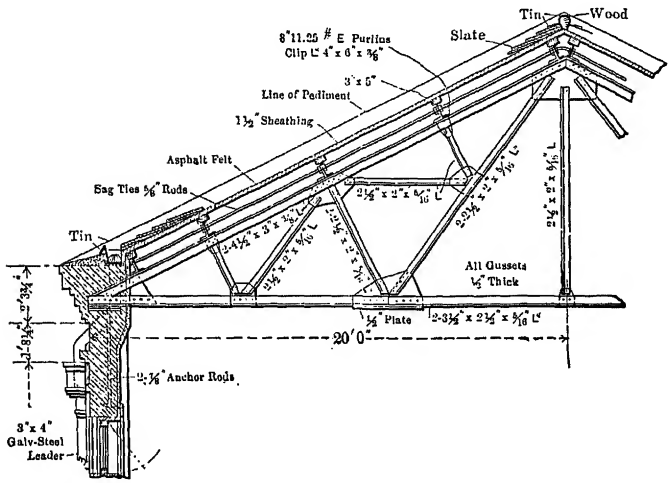

FIG. 6*h*.—Power-house, New Orleans Naval Station.

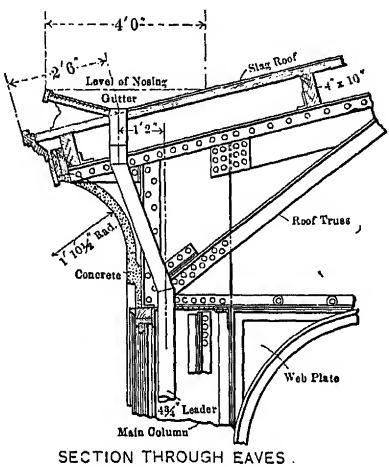

FIG. 6*i*.—Pennsylvania Steel Company's New Bridge Plant.

of masonry, gutters, down-spout, etc. In this roof the purlins rest on the top chord of the truss, and any tipping

or sliding is prevented by angle-clips and $\frac{5}{8}$-inch rods, as shown.

Fig. 6*i*. Detail of connection of a steel roof-truss to a steel column. The illustration also shows gutter, down-spout, cornice, etc.

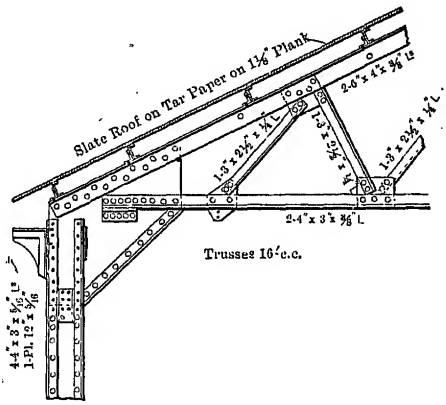

FIG. 6*j*.—Template Shop Roof-truss, Ambridge Plant of the American Bridge Company.

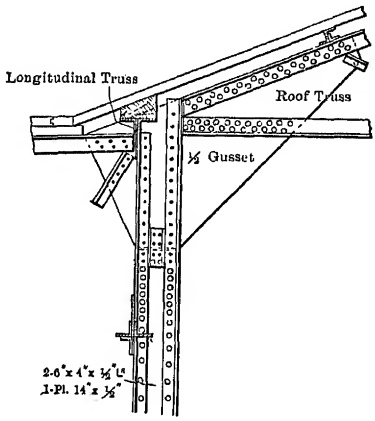

FIG. 6*k*.—General Electric Machine-shop, Lynn, Mass.

Figs. 6*j* and 6*k*. Details similar to those shown in Fig. 6*i*, but for lighter trusses.

7. Abstracts from General Specifications for Steel Roofs and Buildings.

By CHARLES EVAN FOWLER, M. Am. Soc. C. E.

GENERAL DESCRIPTION.

1. The structure shall be of the general outline and dimensions shown on the attached diagram, which gives the principal dimensions and all the principal data. (2, 72.) Diagram.

2. The sizes and sections of all members, together with the strains which come upon them, shall be marked in their proper places upon a strain sheet, and submitted with proposal. (1,72.)

3. The height of the building shall mean the distance from top of masonry to under side of bottom chord of truss. The width and length of building shall mean the extreme distance out to out of framing or sheeting. Clearances.

4. The pitch of roof shall generally be one fourth. (6.)

LOADS.

The trusses shall be figured to carry the following loads:

5. Snow Loads. Snow Load.

Location.	Pitch of Roof.				
	1/2	1/3	1/4	1/5	1/6
	Pounds per Horizontal Square Foot.				
Southern States and Pacific Slope	0	0	0	0	0
Central States	0	7	15	22	30
Rocky Mountain States	0	10	20	27	35
New England States	0	10	20	35	45
Northwestern States	0	12	25	37	50

Wind Load.

6. The wind pressure on trusses in pounds per square foot shall be taken from the following table:

Pitch.	Vertical.	Horizontal.	Normal.
1/2 = 45° 00′	19	19	27
1/3 = 33° 41′	17	12	22
1/4 = 26° 34′	15	8	18
1/5 = 21° 48′	13	6	15
1/6 = 18° 26′	11	4	13

(7.)

7. The sides and ends of buildings shall be figured for a uniformly distributed wind load of 20 pounds per square foot of exposed surface when 20 feet or less to the eaves, 30 pounds per square foot of exposed surface when 60 feet to the eaves, and proportionately for intermediate heights. (6.)

Weight of Covering.

8. The weight of covering may be taken as follows: Corrugated iron laid, black and painted, per square foot:

No.	27	26	24	22	20	18	16	
	.90	1.00	1.30	1.60	1.90	2.60	3.30	pounds

For galvanized iron add 0.2 pounds per square foot to above figures.

Slate shall be taken at a weight of 7 pounds per square foot for 3/16″ slate 6″×12″, and 8.25 pounds per square foot for 3/16″ slate 12″×24″, and proportionately for other sizes.

Sheeting of dry pine-boards at 3 pounds per foot, board measure.

Plastered ceiling hung below, at not less than 10 pounds per square foot.

The exact weight of purlins shall be calculated.

9. The weight of Fink roof-trusses up to 200 feet span may be calculated by the following formulæ for preliminary value: Weight of Trusses.

$$w = .06s + .6, \text{ for heavy loads;}$$

$$w = .04s + .4, \text{ for light loads.} \quad (40, 45.)$$

s = span in feet;

w = weight per horizontal square foot in pounds.

10. Mill buildings, or any that are subject to corrosive action of gases, shall have all the above loads increased 25 per cent. Increase of Loads.

11. Buildings or parts of buildings, subject to strains from machinery or other loads not mentioned, shall have the proper allowance made.

12. No roof shall, however, be calculated for a less load than 30 pounds per horizontal square foot. Minimum Load.

UNIT STRAINS.

	Iron.	Soft-medium Steel.		
13. Shapes, net section.		15000	(57.)	Tension only.
Bars.....	14000	17000		
Bottom flanges of rolled beams. ...		15000		
Laterals of angles, net section.....		20000	(57.)	
Laterals of bar....	18000		(41.)	
14. Flat ends and fixed ends.....		$12500 - 500\frac{l}{r}$.		Compression only.

l = length in feet center to center of connections;

r = least radius of gyration in inches. (59.)

addition to direct strain, such as rafters and posts having knee-braces connected to them, shall be considered as fixed at the ends in riveted work, and shall be proportioned by the following formula, and the unit strain in extreme fiber shall not exceed, for soft-medium steel, 15000.

$$s = \frac{Mn}{I} + \frac{P}{A}. \qquad (52, 62.)$$

s = strain per square inch in extreme fiber;
M = moment of transverse force in inch-pounds;
n = distance center of gravity to top or bottom of final section in inches;
I = final moment of inertia;
P = direct load;
A = final area.

		Soft Steel.	Soft-medium Steel.	
Shearing.	17. Pins and rivets.	10000		(57.)
	Web-plates.		7000	
Bearing.	18. On diameter of pins and rivet-holes. . . .	20000	20000	(57.)
Bending.	19. Extreme fiber of pins.		25000	
	Extreme fiber of purlins.		15000	(49.)

Laterals. 20. Lateral connections will have 25 per cent. greater unit strains than above.

Bolts. 21. Bolts may be used for field connections at two thirds of rivet values. (17, 18.)

22. In purlins of yellow pine, Southern pine, or white oak, the extreme fiber strain shall not exceed 1200 pounds per square inch. (50.) Timber.

CORRUGATED-IRON COVERING.

26. Corrugated iron shall generally be of $2\frac{1}{2}$-inch corrugations, and the gauge in U. S. standard shall be shown on strain sheet. Covering.

27. The span or distance center to center of roof-purlins shall not exceed that given in the following table:

27 gauge.....2′ 0″	20 gauge.....4′ 6″
26 gauge.....2′ 6″	18 gauge.....5′ 0″
24 gauge.....3′ 0″	16 gauge.....5′ 6″
22 gauge.....4′ 0″	(48.)

28. All corrugated iron shall be laid with one corrugation side lap, and not less than 4 inches end lap, generally with 6 inches end lap. (32.)

29. All valleys or junctions shall have flashing extending at least 12 inches under the corrugated iron, or 12 inches above line where water will stand. Valleys.

30. All ridges shall have roll cap securely fastened over the corrugated iron. Ridges.

31. Corrugated iron shall preferably be secured to the purlin by galvanized straps of not less than five eighths of an inch wide by No. 18 gauge; these shall pass completely around the purlin and have each end riveted to the sheet. There Fastenings.

pound rivets not more than six inches apart. (26.)

Finish Angle.

33. At the gable ends the corrugated iron shall be securely fastened down on the roof, to a finish angle or channel, connected to the end of the roof purlins.

DETAILS OF CONSTRUCTION.

Tension Members.

37. All tension members shall preferably be composed of angles or shapes with the object of stiffness.

38. All joints shall have full splices and not rely on gussets. (65.)

39. All main members shall preferably be made of two angles, back to back, two angles and one plate, or four angles laced. (67.)

40. Secondary members shall preferably be made of symmetrical sections.

41. Long laterals or sway rods may be made of bar, with sleeve-nut adjustment, to facilitate erection.

42. Members having such a length as to cause them to sag shall be held up by sag-ties of angles, properly spaced.

Compression Members.

43. Rafters shall preferably be made of two angles, two angles and one plate, or of such form as to allow of easy connection for web members. (65.)

44. All other compression members, except

45. Substruts shall preferably be made of symmetrical sections.

46. The trusses shall be spaced, if possible, at such distances apart as to allow of single pieces of shaped iron being used for purlins, trussed purlins being avoided, if possible. Purlins shall preferably be composed of single angles, with the long leg vertical and the back toward the peak of the roof. **Purlins.**

47. Purlins shall be attached to the rafters or columns by clips, with at least two rivets in rafter and two holes for each end of each purlin.

48. Roof purlins shall be spaced at distances apart not to exceed the span given under the head of Corrugated Iron. (27.)

49. Purlins extending in one piece over two or more panels, laid to break joint and riveted at ends, may be figured as continuous.

50. Timber purlins, if used, shall be attached in the same manner as iron purlins.

51. Sway-bracing shall be introduced at such points as is necessary to insure ease of erection and sufficient transverse and longitudinal strength. (41.) **Sway-bracing.**

52. All such strains shall preferably be carried to the foundation direct, but may be accounted for by bending in the columns. (62.)

53. Bed-plates shall never be less than one-half inch in thickness, and shall be of sufficient **Bed-plates.**

masonry shall have expansion rollers if necessary. (54.)

Anchor-bolts.

54. Each bearing-plate shall be provided with two anchor-bolts of not less than three fourths of an inch in diameter, either built into the masonry or extending far enough into the masonry to make them effective. (53.)

Punching.

55. The diameter of the punch shall not exceed the diameter of the rivet, nor the diameter of the die exceed the diameter of the punch by more than one sixteenth of an inch. (56.)

Punching and Reaming.

56. All rivet-holes in steel may be punched, and in case holes do not match in assembled members they shall be reamed out with power reamers. (71.)

Effective Diameter of Rivets.

57. The effective diameter of the driven rivet shall be assumed the same as before driving, and, in making deductions for rivet-holes in tension members, the hole will be assumed one eighth of an inch larger than the undriven rivet. (13, 17.)

Pitch of Rivets.

58. The pitch of rivets shall not exceed twenty times the thickness of the plate in the line of strain, nor forty times the thickness at right angles to the line of strain. It shall never be less than three diameters of the rivet. At the ends of compression members it shall not exceed

60. Laced compression members shall be staved at the ends by batten-plates having a length not less than the depth of the member. Tie-plates.

61. The sizes of lacing-bars shall not be less than that given in the following table, when the distance between the gauge-lines is Lacin bars.

6″ or less than	8″.....	$1\frac{1}{4}'' \times \frac{1}{4}''$
8″ " " "	10″.....	$1\frac{1}{2}'' \times \frac{1}{4}''$
10″ " " "	12″.....	$1\frac{3}{4}'' \times \frac{5}{16}''$
12″ " " "	16″.....	$2'' \times \frac{3}{8}''$
16″ " " "	20″.....	$2\frac{1}{4}'' \times \frac{7}{16}''$
20″ " " "	24″.....	$2\frac{1}{2}'' \times \frac{1}{2}''$
24″ " above of angles.		(62.)

They shall generally be inclined at 45 degrees to the axis of the member, but shall not be spaced so as to reduce the strength of the member as a whole.

62. Where laced members are subjected to bending, the size of lacing-bars or -angles shall be calculated or a solid web-plate used. (13, 14, 61.) Bending.

63. All rods having screw ends shall be upset to standard size, or have due allowance made. Upset Rods.

64. No metal of less thickness than $\frac{1}{4}$ inch shall be used, except as fillers, and no angles of less Variation in Weight.

Finished Surfaces.

65. All workmanship shall be first class in every particular. All abutting surfaces of compression members, except where the joints are fully spliced, must be planed to even bearing, so as to give close contact throughout. (38.)

66. All planed or turned surfaces left exposed must be protected by white lead and tallow.

Rivets.

67. Rivet-holes for splices must be so accurately spaced that the holes will come exactly opposite when the members are brought into position for driving-rivets, or else reamed out. (38, 70, 71.)

68. Rivets must completely fill the holes and have full heads concentric with the rivet-holes. They shall have full contact with the surface, or be countersunk when so required, and shall be machine driven when possible. Rivets must not be used in direct tension.

69. Built members when finished must be free from twists, open joints, or other defects. (65.)

Drilling.

70. Drift-pins must only be used for bringing the pieces together, and they must not be driven so hard as to distort the metal. (71.)

Reaming.

71. When holes need enlarging, it must be done by reaming and not by drifting. (70.)

Drawings and Specifications.

72. The decision of the engineer or architect shall control as to the interpretation of the draw-

ings and specifications during the progress of the work. But this shall not deprive the contractor of right of redress after work is completed, if the decision shall be proven wrong. (1.)

STEEL COLUMN UNIT STRAINS. $\square\square$ $12500 - 500\frac{l}{r}$.

$l \div r$.	$\square\square$	$l \div r$.	$\square\square$	$l \div r$.	$\square\square$	$l \div r$.	$\square\square$
3.0	11000	7.6	8700	12.2	6400	16.8	4100
.2	10900	.8	8600	.4	6300	17.0	4000
.4	10800	8.0	8500	.6	6200	.2	3900
.6	10700	.2	8400	.8	6100	.4	3800
.8	10600	.4	8300	13.0	6000	.6	3700
4.0	10500	.6	8200	.2	5900	.8	3600
.2	10400	.8	8100	.4	5800	18.0	3500
.4	10300	9.0	8000	.6	5700	.2	3400
.6	10200	.2	7900	.8	5600	.4	3300
.8	10100	.4	7800	14.0	5500	.6	3200
5.0	10000	.6	7700	.2	5400	.8	3100
.2	9900	.8	7600	.4	5300	19.0	3000
.4	9800	10.0	7500	.6	5200	.2	2900
.6	9700	.2	7400	.8	5100	.4	2800
.8	9600	.4	7300	15.0	5000	.6	2700
6.0	9500	.6	7200	.2	4900	.8	2600
.2	9400	.8	7100	.4	4800	20.0	2500
.4	9300	11.0	7000	.6	4700	.2	2400
.6	9200	.2	6900	.8	4600	.4	2300
.8	9100	.4	6800	16.0	4500	.6	2200
7.0	9000	.6	6700	.2	4400	.8	2100
.2	8900	.8	6600	.4	4300		
.4	8800	12.0	6500	.6	4200		

SHEARING AND BEARING VALUE OF RIVETS.

Diameter of Rivet in Inches.		Area of Rivet.	Single Shear at 10000 Lbs. per Sq. In.	Bearing Value of Different Thicknesses of Plate at 20000 Lbs. per Sq. In. (=Diam. of Rivet × Thickness of Plate × 20000 Lbs.).							
Fraction.	Decimal.			$\frac{1}{4}''$	$\frac{5}{16}''$	$\frac{3}{8}''$	$\frac{7}{16}''$	$\frac{1}{2}''$	$\frac{9}{16}''$	$\frac{5}{8}''$	$\frac{11}{16}''$
$\frac{1}{2}''$	.5	.1963	1960	2500	3130	3750					
$\frac{9}{16}''$	.5625	2485	2480	2810	3520	4210	4920				
$\frac{5}{8}''$	.625	.3068	3070	3130	3910	4690	5470				
$\frac{11}{16}''$	.6875	.3712	3710	3440	4290	5160	6010	6880			
$\frac{3}{4}''$	.75	.4418	4420	3750	4690	5630	6560	7500	8440		
$\frac{13}{16}''$	.8125	.5185	5180	4070	5080	6090	7110	8120	9150	10160	
$\frac{7}{8}''$	.875	.6013	6010	4380	5470	6570	7660	8750	9840	10940	
$\frac{15}{16}''$	.9375	.6903	6900	4690	5850	7030	8200	9370	10550	11720	12890